STANDARDS & GUIDELINES FOR THE DESIGN AND CONSTRUCTION OF EDUCATIONAL FACILITIES FOR SEMINOLE COUNTY PUBLIC SCHOOLS

8th EDITION - 2019 (revised April 22, 2020)

SEMINOLE COUNTY PUBLIC SCHOOLS

Facilities Planning Department

8th EDITION – 2019

STANDARDS & GUIDELINES
FOR THE DESIGN AND CONSTRUCTION OF
EDUCATIONAL FACILITIES FOR
SEMINOLE COUNTY PUBLIC SCHOOLS

8th EDITION - 2019

Introduction

The purpose of this manual is to provide the design professional with a general understanding and confirmation of design criteria from a technical and facilities perspective for items of specific concern to Seminole County Public Schools (SCPS). The manual is divided into chapters which reflect the Construction Specifications Institute (CSI) Master Specification Format. It is not the intent of this manual to replace design efforts or insist upon any proprietary products, but merely to serve as a basis of quality and standardization needs for the district. The Contract for Construction General Conditions the Invitation for Bid, and SCPS "Front End" specifications are available from SCPS and shall be incorporated into your construction documents.

The Architect and Engineering team are responsible for ensuring the items listed herein are incorporated into their project design and construction documents. Each specific item in this manual will be acknowledged by the Architect and/or Engineer as applicable, and the original marked up copy returned to SCPS. If an item is indicated as “Will Not Comply”, the designer will indicate the reason on a separate sheet, referencing each item so marked. All design contracts awarded shall comply with this edition document.

Important!

Should any items within this manual conflict with the design professional's basis of design, the designer should immediately notify their assigned SCPS Project Manager prior to proceeding with a particular design. **Any variances from the items listed herein must be confirmed in writing**. Otherwise, the design professional will be expected to incorporate the criteria set forth in this manual and may be held financially responsible for any changes or omissions made from the requirements listed in this manual without explicit written permission.

Any comments or suggestions for improvements to the content of this manual are encouraged and always appreciated. We hope this guide will be of assistance to you and your staff and look forward to a successful project to improve the quality of our facilities in providing the best education for the Students of Seminole County Public Schools.

TABLE OF CONTENTS

TABLE OF CONTENTS (continued)

Appendices

Will Comply	Will Not Comply	N/A			Remarks for Not Complying
				GENERAL INFORMATION - DOCUMENTS	
			1	The design of all projects shall comply with the currently adopted Florida Building Code, Chapter 1013 Florida Statutes, State Requirements for Educational Facilities, ALL Chapters, the Florida Fire Prevention Code, and all other applicable Municipal, State and Federal requirements, including requirements by FDOE Office of Safe Schools.	
			2	The A/E shall design the project per the SCPS board approved Educational Specifications and one for the approved four green design standards per SREF 3.2.	
			3	The A/E Team shall provide practical design solutions that are functional, cost effective, and sustainable as described in the Florida Statutes. Food Service kitchen equipment layout shall be modeled from the respective layouts as show in Pine Crest Elementary, Millennium Middle, and Lake Brantley High School.	
			4	Seminole County Public Schools has developed standard specification “front end” and general conditions templates that are to be completed and amended as appropriate with project applicable requirements and shall be used by the Architect on the project.	
			5	All design and construction drawings shall be 24" x 36"minimum size. Digital DWG file submittals shall be labeled in a scheme that indicates the page/sheet number with the file label. Scale ratios and graphic scales shall be provided for each sheet and detail. The Architect shall produce a reduced 1/2 set of construction drawings for use in the field and office. Detail "books" or 8 1/2" x 11" sketches in the specifications shall not be used. All details shall be clearly shown and accurately referenced on the construction drawings. Drawings to be submitted for municipal review such as site plan approval and/or permitting shall be to the applicable municipality's required scale and sheet size. The A/E shall confirm the size required.	
			6	The construction drawings shall include the project site survey as a separate sheet immediately following the cover sheet.	
			7	The Architect shall furnish to the Owner any revision/additions on the Owner’s plans (1 copy, 81/2 x 14 and CD disc - latest release of Auto CAD DWG and complete PDF file set). All changes issued to the contract drawings shall be dated, titled and clouded.	
			8	The Architect shall prepare FISH floor planes (schematic detail) for SCPS. Show older campus buildings on the FISH plans and update the entire site plan.	
			9	For furniture, equipment, and casework, the designation scheme that will be used on the construction documents in identifying Owner furnished equipment shall be as follow: An alpha character per below followed by a sequence number of the item. “**S**” Furniture, equipment and/or casework procured and installed by the Owner (SCPS) “**SC**” Furniture and equipment procured by the Owner (SCPS) and installed by the Contractor. “**C**” Furniture and equipment procured and installed by the Contractor.	

Will Comply	Will Not Comply	N/A			Remarks for Not Complying
				CONSTRUCTION	
			1	Exterior wall assemblies shall be CMU construction with an exterior bituminous vapor barrier and rigid or foam insulation, brick masonry or CMU (no stucco veneer on vertical surfaces - only soffits); cavity system with weep holes. If a stucco veneer is considered, the furring, attachment (fasteners) type/quantity and thickness of all items shall be designed by a registered structural engineer with the size, quantity, and embedment depth clearly detailed on the construction drawings. Tilt-up type wall systems may be considered for use in non-classroom buildings.	
			2	Exterior stairways shall be designed as cast in place or precast sealed concrete. Metal pans with poured concrete landings and treads shall not be allowed for exterior stairs.	
			3	Exterior yards for chillers and cooling towers shall be enclosed on three sides with walls of masonry construction, capped with metal coping. The walls shall be designed with adequate distance from equipment to allow for proper air circulation (without openings in the wall). The fourth wall shall be 8' high chain link fence (with slats) with double 4' wide swing gates. Orient this opening away from adjacent residences.	

Will Comply	Will Not Comply	N/A			Remarks for Not Complying
				DIVISION 1 - GENERAL REQUIREMENTS	
			1	All project manuals and addendum shall be 3-hole punched with post and screw (no spiral bound).	
			2	The Architect shall state in the contract documents all of the permits (i.e.; water management district, site, utility, right-of-way access, environmental, etc.) that are applicable to this project. When local codes are referenced, copies or internet links of the code and applicable details shall be included verbatim in the contract documents.	
			3	All required inspections involving local municipal agencies shall be arranged and coordinated by the contractor, and attended by the school district's owner's construction representative.	
			4	The project sign shall be as shown in Appendix A. Verify school board members' names and titles with SCPS project manager.	
			5	The specifications will include the requirement for a separate, owner's representative office space on site during the duration of the contract. The office space shall be air-conditioned/heated and furnished with an individual printer/scanner machine, restroom facility, bottled water, office desk and chair, four drawer file cabinet, plan table, and a minimum of two visitor's chairs. Electrical, lighting and unrestricted broadband internet service shall be provided by the contractor and included in the contractor's bid.	
			6	The specifications shall require all contractor, subcontractor, and manufacturer's warranties commence upon substantial completion, not the date of installation or start-up. For projects that have multiple phases/completion dates, the warranties for each phase shall commence upon the substantial completion date of that phase. These warranty requirements for phased work shall include manufacturer warranties as well.	
			7	On occupied campus projects, the staging area and associated offices shall be located s remotely as possible from the center of student circulation on the campus.	
			8	In addition to the documents indicated below, and for permit clearances as required, as-built site drawings in print format shall be submitted to the Owner, certified by a professional land surveyor, clearly showing all as-built conditions, elevations and utilities.	
			9	The A/E shall provide project record documents in the following format: a. Drawings: Three complete sets of files: 1) Portable Document Format (.pdf), 2) Autodesk Autocad (dwg) latest release. Individual files shall be labeled such that the label is associated with the sheet/page number. b. Specifications: Portable Document Format (.pdf) c. Submittals: Portable Document Format (.pdf) d. Shop Drawings: Portable Document Format (.pdf) e. Warranties: Two (2) originals and one (1) set Portable Document Format (.pdf) f. Contract, change orders, ASI/RFI's, pay applications, releases, correspondence: Portable Document Format (.pdf)	

Will Comply	Will Not Comply	N/A			Remarks for Not Complying
				DIVISION 3 - CONCRETE	
			1	The structural floor plane (SOC and elevated slabs) shall clearly show all floor drain locations and the extent/limits that the concrete slab required pitching towards the drain (i.e.; emergency showers, mechanical rooms, kitchens, toilet rooms, etc.)	
			2	When required by the FBC, truncated dome material shall be specified as brick pavers.	
			3	Color, stained, or stamped concrete shall not be specified or used in design. Unless conditions required otherwise, exterior slab finishes shall typically receive a uniform, light broom finish.	
			4	Except for truncated dome locations, brick pavers shall not be used in design or specified.	
			5	Mineral fiber expansion joint material shall not be specified.	
			6	Architectural precast shall not be designed or specified.	
			7	Exterior hollow core slab decks shall have a reinforced (3000 psi min.) poured concrete topping/leveling coating a minimum of 2” thick to ensure a level slab surface regardless of hollow core deck camber. Where topping will be exposed to view, it shall be properly jointed to prevent cracks. Interior hollow core slabs shall have a leveling compound (basis of design shall be Gyp-Crete) which shall be detailed at 3/4"- 1" nominal thickness	
			8	Polished concrete surfaces can be considered for patios, interior hallways, and appropriate classrooms such as art. Discuss with SCPS project manager. Not allowed on intermediate stair landings.	

Will Comply	Will Not Comply	N/A			Remarks for Not Complying
				DIVISION 4 - MASONRY	
				Unit Masonry	
			1	Exposed CMU mortar joints shall be tooled concave type only. Raked joints shall not be specified unless approved in writing by SCPS. All CMU walls will comply with FM = 1500 psi requirements	
			2	Custom color or pigmented mortar shall not be specified.	
			3	Glass block will not be specified for any locations.	
				Brick Masonry	
			1	Brick shall be utility (4x4x12) type. Closure (4x4x8) and empire (4x8x16) type brick shall not be specified. Modular brick (4x8x2 ¼) shall only be specified if matching existing connected structure AND upon written approval by the SCPS project manager. Special fired colors and custom brick/CMU units shall not be specified. Colors/type selected shall be from suppliers/manufacturers readily available standard type.	
			2	Custom colored or pigmented mortar shall not be specified.	
			3	Brick veneer mortar joints shall be tooled concave or V-notch type. Raked joints shall not be specified unless approved in writing by SCPS.	
			4	The specifications shall require that brick veneer be “washed” and cleaned prior to the installation of aluminum windows.	
			5	The specifications shall require construction of a sample, mock up wall of brick veneer, no less than 4’ high, 6” wide, and shall be approved by the Architect and Owner’s representative prior to any brick construction on the building(s).	
				Masonry Accessories	
			1	Wall ties specified for brick veneer cavity wall systems shall be hot dipped galvanized hook and eye type. Corrugated metal ties and continuous joint reinforcing bridging the cavity space shall not be allowed, except for “dove tail” type at tie-beam and column locations.	
			2	Through-wall flashing shall be specified as one of the following materials: 40-guage minimum vinyl membrane, or stainless steel, and shall extend exposed beyond the exterior surface face of the wall. If vinyl membrane flashing is specified, provide a continuous termination bar on the 8”/12” CMU masonry (embedded in bituminous material) fastened to less than 12” OC.	

Will Comply	Will Not Comply	N/A			Remarks for Not Complying
				DIVISION 5 - METALS	
			1	Specifications shall require all structural steel and metal deck welds to be properly cleaned and coated with zinc chromate primer where exposed to weather. Locations that will be permanently enclosed indoors may be left un-painted.	
			2	Exposed exterior structural/miscellaneous steel or framing members shall be kept to a minimum and not designed for aesthetic purposes.	
				Miscellaneous Metals	
			1	All exterior brick support angles where the underside of the angle is exposed (i.e.; lintels, windows, etc.) shall be specified to be hot dipped.	
			2	Provide metal covers for horizontal and vertical expansion joints 1” and wider at exposed areas.	
			3	All steel members exposed to the exterior and weather shall be specified as receiving hot-dipped galvanized coatings.	
			4	All handrails installed in student circulation areas shall be a minimum 0.125” thickness wall aluminum, standard mill finish, with reinforced welds and connections.	
			5	The structural and miscellaneous support framing for suspended folding partitions, even if partitions are to be installed by others/future, shall be clearly delineated and detailed by the structural engineer in the construction drawings. Maximum permitted deflection for members supporting folding partitions shall be span/1150 unless tighter tolerances are specified by partition manufacturer.	

Will Comply	Will Not Comply	N/A			Remarks for Not Complying
				DIVISION 6 - WOOD and PLASTICS	
				Rough Carpentry	
			1	Wood blocking material shall be specified as pressure treated	
				Finish Carpentry	
			1	Support bases for base cabinets shall be of 1” x 4” (min.) pressure treated material.	
			2	All materials in cabinets (except shelving) shall be specified as ¾” plywood, with the exception that doors shall be specified as commercial grade high density particle board, ¾” thickness. Particle board cabinets can be specified for elementary schools (except under sinks and wet locations).	
			3	All materials in cabinets shall be specified as ¾” plywood and adequately braced, with the exceptions that doors shall be specified as commercial grade high density particle board, ¾” thickness. Ensure there are sufficient backpack hooks either on the wall or part of student desks - confirm preference and quantity with SCPS.	
			4	All visible surfaces that are not concealed by a permanent wall or adjacent cabinets shall be laminated.	
			5	All general classroom storage room shelving will be owner furnished. Architect to determine size and quantity of freestanding shelving and submit list, by rooms number, of shelving required.	
			6	The maximum depth of any adjustable shelving shall be 24”. Thickness of shelving shall be ¾”. If wider shelving is required, it shall be designed and specified as fixed shelving and provided by SCPS (Architect shall identify and submit to SCPS, fixed shelving requirements, dimensions and quantity at completion of construction documents.	
			7	All drawer pulls shall be specified accessible and strong to resist student damage.	
			8	Locks shall be specified for cabinets only in the following spaces; clinic, CCTV and AV storage, science and computer labs, and kitchen office.	
			9	The A/E shall ensure the coordination of millwork and MEP items for proper receptacles heights and locations, as well as clear distance between sink counters and upper cabinets to accommodate the owner specified paper hand towel dispenser.	
			10	All exposed sides of shelving are to receive plastic laminate or PVC edge banding	

Will Comply	Will Not Comply	N/A			Remarks for Not Complying
				DIVISION 7 - THERMAL AND MOISTURE PROTECTION	
				Damp proofing, Insulation & Fire stopping	
			1	CMU damp proofing shall be specified as a troweled or sprayed-on application if a sprayed-on application is selected, it shall be specified to be applied in no less than 3 separate coats and verified to the Owner's Construction representative's satisfaction. All voids and control joints shall be filled prior to the application of bituminous coating. Contractor to provide manufacturer's data sheets for bituminous coating indicating proper thickness and a signed letter for the manufacturer.	
			2	All joints between rigid insulation wall panels shall be sealed/taped.	
			3	Exterior walls shall be continuous to the underside of the roof deck assembly. Do not design soffits venting into an attic space above interior spaces. Roof insulation shall be designed in the roof deck assembly and not placed on the space ceiling assembly. Above ceiling spaces shall be designed air tight to prevent outside air from entering ceiling space.	
				Roofing Systems & Flashing	
			1	Architect shall clearly indicate the detail all roof cricket valleys and ridge line patterns on the construction documents.	
			2	Single ply PVC membrane roofing systems shall only be of the following manufacturers. ERC PVC, Fibertite, Sarnafil, Johns Manville, Integrated Roofing Systems Cat 5, or Carlisle. Membrane thickness shall be a minimum 45 mil with a 20 year warranty - no dollar limit. Elongation at Break % per ASTM D 751 - strip: "18". Puncture Resistance (lbs) per ASTM D751: "350"	
			3	Modified bitumen roofing systems shall be of the torch grade, 2-ply minimum of the following manufacturers: Soprema or Tamko. Specifications for modified bitumen roofing shall include a ½" cover board and minimum 2-ply base flashings	
			4	If the Architect or Consultant deems an ERC vented roof system design to be applicable to the project for cost or other factors, they may propose the systems for specific approval by the project manager.	
			5	The specifications shall state that the manufacturer shall provide field reports, training, and certify SCPS roofing technicians to perform warranty repairs and modifications to allow subsequent penetrations.	
			6	Built-up hot asphalt roofing of any type shall not be specified.	
			7	Parapet walls shall be designed so that the roof membrane is continuous up and over the top of the parapet wall and counter flashed by the coping. The membrane shall have continuous termination bars mechanically fastened on the roof plane along the parapet perimeter per the approved manufacturer's requirements.	
			8	The coping will be continuous along the building cap line and shall not project more than ½" from the face or rear of the parapet wall. Masonry or precast coping is not allowed at any location. Coping material shall be specified as either stainless steel grade 304 or 0.050 thickness aluminum.	

Will Comply	Will Not Comply	N/A			Remarks for Not Complying
				DIVISION 7 - THERMAL AND MOISTURE PROTECTION (cont.)	
			9	Maintenance/walkway pads shall be specified at the roof access point and around all sides of roof top mechanical equipment for membrane roofs to a distance from the face of the unit no less than 4'. Pads shall not extend or overlay any membrane.	
			10	Metal roofing panels that require seaming shall be no thinner than 24 GA thickness. Metal roof panels shall be (only) aluminum material, mill finish, .040 thickness minimum with 12" maximum seam width. Exposed fasteners shall not be specified or allowed. Metal roofing panels shall be double lock standing seam type.	
			11	Metal roof systems, or roofs that drain over the perimeter face of the building shall be designed with integral seamless aluminum gutters and discharge into an underground collection system.	
			12	Roofs shall have positive drainage of no less than ¼" per foot with all runoff collecting into either interior roof drains or gutters and downspouts. These systems shall discharge into a site storm water collection system. 1/8" per foot slope will be allowed for renovations only with written approval from the SCPS project manager.	
			13	Overflow protection systems for interior roof drains with parapet walls shall be accomplished through scuppers only. Overflow protection shall not be located over doors or windows. The design of secondary interior overflow systems shall be avoided.	
			14	Asphalt shingle roofs shall not be specified.	
			15	All downspouts shall be a minimum schedule 40 PVC up to 8' above finish grade and drop out transitions to 3/16" aluminum.	
			16	All gutters shall be continuous between turns and ends. Joints at turns, bends, and downspouts shall be welded/soldered.	
			17	The specifications and details for all gutters shall require the outer edge of the gutter to be, at a minimum, 2" below the interior upper edge or break.	
			18	The Architect shall provide flashing details for all exterior envelope openings.	
			19	PVC roof coating systems shall be specified either Astec Re-Ply or RPM and shall include a minimum 45 Mil thick overlay as the Architect deems applicable. Silicone roof coating as manufactured by GE is allowable.	
			20	Metal roof coating systems shall be specified as Astec Re-Ply, Tremco, ER Systems, RPM or Hydro-Stop Premium Coat with Kymax finish, and shall provide a minimum 10 year warranty inclusive of a rust inhibitive primer. New metal roof coating systems shall include rust inhibitive primer and 2 finish coats of air dried floro-polymer.	

Will Comply	Will Not Comply	N/A			Remarks for Not Complying
				DIVISION 7 - THERMAL AND MOISTURE PROTECTION (cont.) **Joint Sealants**	
			1	All caulking shall be accomplished by individuals qualified to perform such work. The individual will perform sample work demonstrating competence to the satisfaction of the Architect and Owner's construction representative. Hold point after bituminous coating application for verification of proper application. A sign off letter from the manufacturer is required. Caulking at non-painted areas shall be silicone based, i.e.; brick control joints. Architect to specify "bond break tape" for caulking.	
			2	Sealants within the reach of persons shall be low ductility type, such that they cannot be damaged or easily removed from the joint ("pick proof"). Any joint wider than 1" shall have a joint cover no less than 8' in height above finish floor, fastened only on one side.	
			3	Backer rod type or bond break tape to be confirmed or determined by sealant manufacturer.	
			4	Provide close-out documents for all product data on all fire sealants used on the job with color coding, if needed.	

Will Comply	Will Not Comply				Remarks for Not Complying
				DIVISION 8 - DOORS AND WINDOWS	
				Steel Doors and Frames	
			1	Exterior doors shall be galvanized hollow metal doors and frames. Aluminum storefront systems shall not be specified.	
			2	All exterior steel door frames shall be 14 GA minimum wall thickness. Frames set in masonry shall have the interior coated with a brushed applied bituminous coating. Frames set in CMU masonry construction shall have 4" heads. Interior frames shall be a minimum of 16 GA.	
			3	Steel doors shall be galvanized and comply with the Steel Door Institute (SDI) specifications.	
			4	Exterior door frames shall be prepped for the installation of intrusion detection magnetic sensors with 1 diameter holes on top jamb. 12" from the strike side of the frame and access control system wiring and hardware.	
				Wood & Miscellaneous Doors/Openings	
			1	When permitted by code, interior doors shall be solid core wood type conforming to NWMA with a minimum style thickness of 2". Finish shall be solid core plain rotary cut birch veneer, pre-finished off site.	
				Windows and Glazing	
			1	Aluminum windows shall meet HC-60 requirements with stainless steel hardware and fasteners. Screens shall not be included or specified.	
			2	Operable aluminum windows shall be specified to meet HC-60 requirements and be of the individual projected, awning or casement type with individual custodial latches. Operable worm gear awning type windows shall not be specified.	
			3	Only the minimum amount of operable windows (as outlined in SREF) shall be designed for in classrooms. All other glazing shall be fixed.	
			4	Aluminum frame finish for windows shall be (aluminum) clear anodized finish.	
			5	All student occupied spaces (excluding toilet and dressing rooms), classrooms, etc. shall have 4" thin light glazing. Offices and conference rooms shall have upper half door glazing panels. Bullet resistant glazing or film shall be considered.	
			6	Window sill heights at all locations shall be a minimum of 40" AFF, unless approved in writing by the SCPS project manager	
			7	The specifications shall include a water intrusion test of a minimum of four installed window assemblies, and verified on site with the Owner's representative.	
			8	Ticket windows to based on Quikserv model T1-2436, T1-3036 and T1-3636. Verify with the district if a speak-thru is required. Sizes 24"x36", 30"x36", 36"x36"	
				Door Hardware	
			1	Lock cores for exterior doors shall be specified as Schlage, Primus" type, with Medeco XT digital cylinder locks and digital keys. The main entry doors shall have Medeco XT Bi-lever locks with a non-electronic key placed in the knox-box.	
			2	All interior doors must be Schlage lever action passage type with Medeco XT digital cylinder locks and digital keys.	

Will Comply	Will Not Comply	N/A			Remarks for Not Complying
				DIVISION 8 - DOORS AND WINDOWS (cont.)	
			3	Exterior doors shall be specified for mortise type locks in lieu of cylindrical type, complying with ADA accessibility requirements. Double leaf exterior doors shall have enter removable mullions. Doors for service and receiving areas shall be double 3'-0" doors minimum - one leaf inoperative with latch bolts.	
			4	Exterior doors in high traffic locations such as corridor exits, public entry doors, shipping/receiving, etc. shall be specified to have continuous aluminum or stainless steel hinges. All other doors shall have butt hinges for mortise type locks in lieu of cylindrical type.	
			5	Closures and all surface mount hardware shall be fastened with through bolts and finish washers.	
			6	Hold open hardware/latches of any type shall NOT be specified for any exterior doors.	
			7	Exposed vertical riser bars on hollow metal doors with panic devices shall be specified as being stainless steel. Aluminum shall not be specified or accepted.	
			8	The specifications shall indicate the hardware installer shall be approved and acceptable to the manufacturer and their representative, and the Owner's representative.	
			9	The specifications shall indicate the installer shall use only the hardware provided by and included with the hardware product. Self-tapping fasteners shall not be used. Any use of other hardware fasteners shall be specifically approved by the Architect or Owner's representative.	
			10	Specifications shall include (Section 28 10 00) network based card swipe access control systems for all exterior doors, mechanical, electrical, and systems rooms. Other spaces may also require access control locking as determined by the SCPS project manager.	

Will Comply	Will Not Comply	N/A			Remarks for Not Complying
				DIVISION 9 – FINISHES **Lath, Plaster & Stucco**	
			1	Plaster, stucco lath and EFS shall only be specified for soffit locations. Stucco and EFS shall be avoided on vertical exterior wall surfaces.	
			2	Stucco finishes shall only be specified as “sand finish”. “Skip trowel” finishes on masonry or drywall surfaces shall not be specified.	
			3	EIFS wall systems shall not be specified for any location unless approved by SCPS.	
			4	Prefer the use color integrated stucco for soffit locations.	
				Gypsum Board Walls and Framing	
			1	All metal studs shall be specified to have a minimum thickness of 22 GA.	
			2	Cementitious wall board shall be specified for metal stud walls in areas exposed to moisture, such as toilet rooms, showers, etc.	
				Ceilings	
			1	Acoustic tile ceilings shall be 2’ x 2’ non-tegular. Tectum tile lay in panels may be specified when a short construction schedule is needed, and building dry in time is critical. Consider using Rockfon Stone Wool Ceiling.	
			2	Impervious ceiling (such as kitchen toilet spaces, etc.) shall be gypsum board with hardcoat plaster or vinyl surface lay-in 2’x2’ with grid.	
				Walls	
			1	If a color banding or pattern in ceramic tile is desired the banding/pattern shall be clearly detailed for pricing at bid on the construction drawings. The specifications shall indicate setting of either a 2 or 3 color group pattern.	
			2	All kitchen walls and serving line spaces shall be of masonry construction and water based epoxy painted equivalent to Sherwin Williams B-70.	
			3	Provide acoustical wall treatment at all serving lines and in dining areas on upper portion of wall, bottom of panels at 7’ AFF minimum.	
			4	Student and group restroom spaces: wet walls shall have a ceramic tile finish full height, BM Scuff-X paint on remaining walls. Faculty restroom spaces shall have ceramic tile only on walls with toilet and lavatory fixtures (wet walls).	
			5	Vinyl wall coverings shall not be specified for any location.	
			6	Wall finish to be specified for the Principal’s office shall only be painted gypsum wallboard.	
			7	Walls in electrical and mechanical rooms shall not be painted.	
			8	Walls in gym lockers shall be painted BM Scuff-X paint on CMU in lieu of ceramic tile.	

Will Comply	Will Not Comply	N/A			Remarks for Not Complying
				DIVISION 9 – FINISHES (cont.) **Floors**	
			1	LVT tile shall have a pattern in corridors and large public spaces with up to 5 colors. "Field" LVT shall not be a very light color. SCPS project manager can provide the standard district color scheme options.	
			2	Luxury Vinyl Tile (LVT) shall be minimum 2.5mm thickness. Basis of design shall meet the Armstrong Diamond 10 specifications.	
			3	Specifications shall require LVT floors to be maintained per the manufacturer's requirements. Must include a rapidly renewable resource content.	
			4	All restrooms, custodial closets, locker rooms and systems room (MDF/IDF) shall be specified with water based epoxy finish (equivalent to Sherwin Williams B-70) with a minimum 6" high base and continuous sanitary base between wall and floor surfaces. Quarry tile floors shall be sealed by the contractor prior to SCPS's acceptance.	
			5	LVT (no carpet) shall be specified for all secondary classroom spaces. All corridors, including administrative spaces, shall be either LVT or polished concrete finish only (provide carpet in offices).	
			6	Classrooms in elementary schools shall have both LVT (wet areas) and carpet. Exact areas and locations to be determined by the SCPS project manager. The LVT shall be continuous from the corridor/classroom entrance to the carpet. Provide a 2 piece vinyl transition mechanically fastened strip similar to Mercer 970 & 940.	
			7	Carpet and adhesive shall be specified as Owner furnished/contractor installed. The Contractor shall be responsible for slab preparation, furnishing/applying adhesives (see below), pick-up and delivery from the SCPS Consolidated Services site in Winter Springs, unloading, and project storage. The Contractor will advise the Owner in advance (no less than 90 calendar days), based on the colors selected by the Architect, of the quantity (by color) of carpet and adhesive the Owner is to order and provide.	
			8	The specifications shall require the contractor to verify the moisture content of the surface the floor finish/covering is to be applied to and make certain the surface moisture content is acceptable to the installer and manufacturer. If the moisture content exceeds ranges deemed acceptable to the installer or manufacturer for applying the finish/covering, the contractor shall be required to apply a sealant or a product acceptable to the manufacturer that will mitigate moisture content concerns in applying the floor finish/covering.	
			9	Carpet shall not be used on vertical surfaces (completely or partially) as a wall finish or base.	
			10	Kitchen floor finishes shall be thick set quarry tile. Kitchen serving line area shall be LVT. Coordinate with Dining Services Project Manager.	
			11	Quarry tile shall be non-slip type and the floor shall be specified to receive an appropriate sealer.	
			12	Quarry tile floors shall be sealed by the Contractor prior to SCPS's acceptance.	
			13	Large Porcelain tiles are acceptable for areas like the Administration reception.	
			14	Gymnasium and dance flooring shall be wood, with 3 coats of urethane finish.	

Will Comply	Will Not Comply	N/A			Remarks for Not Complying
				DIVISION 9 – FINISHES (cont.) **Floors**	
			15	High school auditorium stage flooring shall be Black enamel painted White pine. The stage nosing (6" width minimum) shall be clear maple finish or other light contrasting color as approved by SCPS.	
			16	Maple flooring shall have 3 coats of water based urethane.	
			17	All mechanical and electrical room floors shall be painted (steel gray color) with epoxy based floor paint.	
			18	Interior stairs to have full tread depth rubber risers (with non-slip raised pattern) with integral visible nosing (3" wide "safety yellow" stripe measured from front edge of nosing and extending full width of tread) per OSHA standards. Intermediate landings shall be vinyl rubber material. All exterior steps and stairs shall have nosing painted per ADA. Stair treads risers and intermediate landings shall be vinyl rubber material. First floor and second floor of stairwells match the hallway flooring LVT.	
			19	Use rolled vinyl cove bases in lieu of 4' sections.	
				Painting	
			1	Existing exterior stucco surfaces shall be painted with an impermeable coating or paint such as an elastomeric type coating	
			2	The specifications shall require each coat of paint be tinted slightly different from the previous coat to verify the application of subsequent coats.	
			3	All corridors shall be painted with BM Scuff-X 485 or product considered equal by the SCPS project manager. Classrooms and offices shall be painted with latex and eggshell finish.	
			4	SCPS has developed five color scheme options for paint accents. Review with SCPS project manager.	

Will Comply	Will Not Comply	N/A			Remarks for Not Complying
				DIVISON 10 – SPECIALTIES **Display Boards and Projection Screens**	
			1	Marker boards shall be White porcelain enamel on steel sheet panels, low gloss or matte finish for dry erase markers.	
			2	Confirm sizes and locations for teaching wall with SCPS. To be coordinated with current standard electronic presentation system. See Appendix E.	
			3	Typical marker board on the teaching wall shall have a continuous maker/eraser holding tray immediately below the marker board, and map rail along the upper edge with a ½" sliding flag holder.	
			4	The tack board specification for a new campus shall include six (6) additional 4'x4' tack boards to be supplied and installed by the Contractor at the direction of the Owner.	
			5	A ceiling mounted electric projection screen will be provided in the media center for all schools	
			6	High school auditorium projection screens shall be motorized and have a 20'W x 15'H viewing area. Control of the screen shall be by both keyless remote in the control room, and key switch remote to the side of the stage opening.	
			7	Confirm with SCPS Project Manager if backpack hooks will be provided on student desks or walls.	
				Toilet Partitions & Accessories	
			1	Group toilet partitions and partition doors shall be 1" thick solid plastic type similar to Scranton Products. Toilet partitions shall be floor and wall mounted (no ceiling hung). Mount and brace partitions in a secure method that will not allow easy movements or vandalism.	
			2	Stainless steel (reflection surface) mirrors shall be specified for student toilet spaces in middle and high schools.	
			3	Soap, paper towel, and toilet tissue dispensers shall be contractor furnished and installed and shall be of the following products. - Hand towel dispense (staff toilet spaces only): GP #54338 - Electric hand dryer (specify recessed electric hand dryers in student and public use toilet spaces in elementary and secondary schools): FastDry HK 1800CA - Toilet tissue dispenser: GP #59012 (locate above grab bars) - Liquid hand soap dispenser: DICKEYE #B99011191 (Owner furnished, Contractor installed) - Sanitizer BUCKEYE #B99010250 (Owner furnished, Contractor installed) - Confirm dispenser model numbers with SCPS custodial services and/or distribution services prior to ordering. All other accessories shall be specified by the Architect.	

Will Comply	Will Not Comply	N/A			Remarks for Not Complying
				DIVISON 10 - SPECIALTIES (cont.) **Signage & Graphics**	
			1	Exterior school information/pedestal signs for middle and high schools shall be provided along the street front near the parent drop-off roadway entrance with a digital message board. Products specified shall be similar or equal to Daktronix, Robson Corporation "Communicator" or JM Stewart Corporation "Announcer".	
			2	For new campus and major additions & renovations projects, a bronze project plaque shall be included in the specifications in Appendix C. School Board members' names on the plaque shall be those members in office at time substantial completion. The plaque mounting location shall be determined in the field by the SCPS project manager.	
			3	The Architect shall coordinate with SCPS the interior signage to ensure it is consistent with existing and proposed Florida Inventory of School Houses (FISH) designations. Architect shall coordinate room numbering with SCPS during the design development phase. Room numbers on the construction drawings and on schedules shall accurately reflect the FISH numbering scheme at project completion. Provide the signage required by ADA only and a 1" font (White letter and Black background), FISH/Room number only centered on door header. Use vandal resistant screws and adhesive.	
			4	All Life Safety signage required by SREF such as fire alarm pull station inside, fire extinguisher inside, secondary egress, maximum occupant capacity, etc. shall be included in the construction contract and clearly detailed with installation locations shown on the construction Life Safety drawings.	
			5	The Architect shall prepare and specify that the contractor install emergency evacuation route plans per the Florida Building Code. Each plan shall be laminated or printed on stock media and set in a transparent, tamper resistant frame/folder adjacent to the primary exit door of the room.	
			6	Exterior directional signage shall be aluminum backed and mounted on a 2.5" diameter, 0.125" thickness, aluminum post with adequate concrete foundation. Signage shall have Black lettering on White background.	
			7	Campuses with more than one structure shall have 16" high aluminum or vinyl building number (FISH building number) located on the fascia, on the elevation most visible to public/student circulation. In addition to the building number, the ADMINSTRATION, GYMNASIUM, AUDITORIUM entries shall have 16" or 20" aluminum letters.	
			8	Truss law signs shall be determined and installed on the exterior of each building and structure for light-weight truss roof systems ®, floor systems (F), and roof and floor systems (RF).	
			9	All PIV's / WPIV's and FDC's must be labeled as to which buildings they serve.	
				Aluminum Walkway Canopies	
			1	Aluminum walkway canopies shall be extruded aluminum finish. Custom colors or extrusions will not be allowed.	
				Lockers, Folding Partitions, Fire Extinguishers, Miscellaneous	
			1	If student lockers are included in the program, student book lockers shall be 3 tier. Construction will be heavy gauge.	
			2	Athletic lockers shall be constructed with welds in lieu of rivets and manufactured to receive pad locks.	
			3	Fire extinguishers shall be SCPS furnished, contractor installed. Fire extinguisher cabinets shall be specified as contractor furnished and installed. Coordinate with SCPS project manager.	

Will Comply	Will Not Comply	N/A			Remarks for Not Complying
				DIVISON 10 - SPECIALTIES (cont.) **Lockers, Folding Partitions, Fire Extinguishers, Miscellaneous**	
			4	A minimum of a 2A10BC fire extinguisher shall be provided and placed close as practical to the entry door on the interior of all MDF and mechanical rooms.	
			5	Provide locked, breakaway cabinets for fire extinguishers.	
			6	Fire extinguisher cabinets shall not be located on the exterior of any building. A “FIRE EXTINGUISHER INSIDE” sign shall be used for exterior corridor type facilities.	
			7	Fire extinguishers and/or cabinets shall be located in interior corridors per code. Fire extinguishers and/or cabinets required in kitchens, laboratories, shops, etc., shall be located per code.	
			8	All mop sinks contiguous to the wall(s) shall have aluminum back-splash wall panel full height from top of sink to top of back-splash, and extend 12” beyond each side of the sink. The finish will be clear brushed aluminum. Corners shall be caulked (anti-microbial). Mop sinks shall be placed toward the front of custodial rooms for easy access. Install mop hangers above floor sinks and high enough so wet mops drain into sink. Eliminate shelves above wet mop hangers.	
			9	Accordion partitions shall not be specified unless approved in writing by SCPS.	
			10	For stage curtains, utilize Encore IFR (or equal) fabric (fire retardant for the life of the fabric).	

Will Comply	Will Not Comply	N/A			Remarks for Not Complying
				DIVISION 11 - EQUIPMENT	
			1	All Owner furnished equipment shall be clearly noted on the schedules and construction drawings.	
				Curtain & Tracks	
			1	All gymnasiums shall have an operable retractable curtain perpendicular to the long axis of the gymnasium, located at the center of the gym.	
				Athletic Related Equipment	
			1	All interior basketball goals shall be retractable by an easily accessible key switch controlled electric winch. Provide safety devices on goals over bleachers to prevent an accident if a cable fails while in the raised position.	
			2	Benches in locker rooms shall be wood or metal assemblies as reviewed by SCPS project manager.	
			3	Exterior basketball goal post shall have a minimum wall thickness of Schedule 40 with a hot dipped galvanized coating.	
			4	All scoreboards shall be Contractor furnished, Contractor installed.	
				Residential & Food Service Equipment	
			1	All residential appliances (except microwaves) shall be Contractor supplied and installed.	
			2	Food service kitchen equipment shall be configured and designed for natural gas when available. If not available, equipment shall be 480 VAC electrical. Food Service kitchen equipment layout shall be modeled from the respective layouts as show in Pine Crest Elementary, Millennium Middle, and Lake Brantley High School.	

Will Comply	Will Not Comply	N/A			Remarks for Not Complying
				DIVISION 12 - FURNISHINGS	
				Casework	
			1	Media Center shelving, circulation desk and furnishings shall be furnished and installed by Owner. The design and coordination of the furniture/casework shall be the responsibility of the Architect and SCPS.	
			2	Science casework shall have acid resistant plastic laminate counter tops in lieu of chemical resin type solid surfaces.	
			3	Science casework shall be lockable.	
				Lab Safety Items	
			1	Science rooms, labs, or shops where instructors and students handle materials or chemicals potentially dangerous to human tissue shall be provided with a dousing shower and eye wash for emergency use, including a floor drain.	
			2	Laboratory and shop spaces, including science, chemistry, woodworking, automotive repair, welding, etc. shall be provided with exhaust systems per the Mechanical Code of the FBC and SREF.	
			3	Laboratory and shop spaces, including science, chemistry, woodworking, automotive repair, welding, etc. shall be provided with exhaust systems per the Mechanical Code of the FBC and SREF.	
			4	Fire suppression system shall be tied into the fire alarm system per code	
				Window Treatments	
			1	Vertical blinds shall be vinyl and specified for all interior and exterior windows, except operable door lites and public group spaces (student dining, lobbies, etc.). Color to be White. Plastic type shall not be specified.	
				Bleachers and Stadium Seating	
			1	Telescoping bleachers shall be extended/recessed through a motorized, key operated system. Design basis shall be "Hussey". Designs shall utilize modular systems and dimensions in-lieu of custom dimensional/manufactured type. Bleachers shall be wood.	

Will Comply	Will Not Comply	N/A			Remarks for Not Complying
				DIVISION 13 - SPECIAL CONSTRUCTION	
			1	SCPS encourages the use of pre-engineered structures for economic construction when deemed appropriate. The Architect shall consider and discuss with SCPS staff the possible use of pre-engineered structures with masonry infill.	
			2	When pre-engineered structures are incorporated into a project design, the contract documents will indicate all foundation dimensions, and indicate the building system the design upon the foundations are based.	
			3	The specifications and construction documents shall be specific in indicating what framing members (whether pre-engineered framing or structural steel - Div 5) will be required to resist gravity and lateral loads of wall and floor systems. If structural steel is required, the member properties and sizes shall be clearly indicated on the construction documents.	
			4	Fasteners for metal panels on pre-engineered structures shall be of concealed design and type. Exposed fasteners with UV resistant neoprene washers shall only be permitted at closure and trim pieces. Thermal breaks shall be specified to prohibit insulation compression.	
			5	The specifications for pre-engineered structures shall require all raised panel flutes at eave edges to have metal closure plates, attached firmly and properly sealed. Rubber, polystyrene or other materials shall not be allowed as closure plates.	
			6	The specifications for pre-engineered structures shall require the outer edge of the gutter to be, at a minimum, 2" below the interior upper edge or break.	

Will Comply	Will Not Comply	N/A			Remarks for Not Complying
				DIVISION 14 - CONVEYING SYSTEMS	
			1	Elevator cab interior clear dimensions shall be, at a minimum, 6' wide x 5' in depth. The specifications shall require the contractor to furnish cab interior protection pads. Provide two elevators, in one contiguous shaft, in large secondary classroom buildings.	
			3	The elevator shall be called through a keyed switch recall pad (same key) at each floor. Push button call pads are not allowed. The Contractor shall turn over 20 keys to the Owner.	
			3	The elevator specifications shall include a one (1) year service contract that becomes effective upon project substantial completions (applicable building for multi-phased projects).	
			4	The elevator specifications shall require the manufacturer to provide the emergency telephone that is installed in the cab. The phone station shall be accessible and all connections from the phone to the termination point in the equipment room shall be accomplished by the elevator contractor.	

Will Comply	Will Not Comply	N/A			Remarks for Not Complying
				DIVISION 21 - FIRE SUPPRESSION SYSTEM **Common Work Results for Fire Suppression System**	
			1	All work shall comply with applicable requirements set forth in the General Conditions and applicable codes as follows: · Standard for the Installation of Sprinkler System - NFPA 13, 2013 · Standard for the Installation of Standpipe and Hose System – NFPA 14, 2013 · Florida Administrative Code FAC 61G15-32.003 and FAC 61G15-32.004. · Florida Building Code 6th Edition (2017) · Florida Fire Prevention Code 6th Edition (2017) · Fire Code - NFPA 1, 2015 w/ Florida Amendments · Life Safety Code – NFPA 101, 2015 w/ Florida Amendments · National Electrical Code - NFPA 70, 2014 w/ Florida Amendments · National Fire Alarm and Signaling Code - NFPA 72, 2013 w/ Florida Amendments · State Requirements for Educational Facilities (SREF) · Local codes or standards incorporated by the authority having jurisdiction. · Seminole County Public School Design Standards. · The entire fire protection system shall be approved by the authority having jurisdiction. Any adjustments or additions to this system required to secure the approvals, shall be part of the work of this Section.	
				Basic Materials and Methods for Fire Suppression System	
			1	All exposed piping shall be painted red.	
			2	Steel angles, channels, and plate shall be in accordance with ASTM A36	
			3	Steel members, including fasteners, exposed to weather shall be galvanized.	
			4	Fabricated steel supports may be shop or field fabricated, and shall be in accordance with de-tails on drawings.	
			5	Steel members shall be saw cut, with corners ground smooth, and shall be assembled with welded or bolted connections at Contractor's option. Connections shall be in accord with specified AISC Publications	
			6	Provide a legible hydraulic calculation plates at each fire risers.	
				Section 21 05 16 -Expansion Fittings and Loops for Fire Suppression Piping	
			1	Steel Piping shall be new, designed for 175 psi working pressure, conforming to ASTM specifications and have the manufacturers name and brand, along with the applicable ASTM standard, marked on each length of pipe.	
			2	Overhead – Steel piping shall be black steel on wet sprinkler systems and galvanized steel on dry sprinkler system.	
			3	Standard Wall overhead piping shall be black steel, electric resistance welded and shall comply to specifications of ASTM-135. Piping 2" and larger may be schedule 10 and 1-1/2" and smaller to be Schedule 40. All pipe and fittings to be in accordance with NFPA 13.	
			4	All grooved couplings and mechanical joint fittings shall be ductile iron conforming to ASTM A-536. Hot dipped Zinc galvanized fittings shall be provided on dry sprinkler systems. Couplings and gaskets shall be the products of a single manufacturer.	

Will Comply	Will Not Comply	N/A			Remarks for Not Complying
				DIVISION 21 - FIRE SUPPRESSION SYSTEM (cont.) **Section 21 05 16 -Expansion Fittings and Loops for Fire Suppression Piping**	
			5	Valve ends shall be compatible with the couplings used on the connecting piping.	
			6	Fittings: Shall be UL listed or FM approved for use in wet pipe sprinkler and dry sprinkler systems where applicable	
			7	Welding shall be forged, seamless, black steel, standard weight long radius, conforming to ASTM A234. Weld-o-let fittings, as manufactured by Bonney Forge, may be used in lieu of forged tees. All welding shall be done in compliance with NFPA 13.	
			8	Screwed fittings shall be Cast iron conforming to ANSI B16.3 Class 150. All fittings, regardless of size.	
			9	Steel pipe fittings shall withstand a cold water working pressure of not less than 175 psi and shall be cast or malleable iron in compliance with the NFPA Standards.	
			10	Flanged fittings shall be forged carbon steel, 150 lb. welding neck type conforming to ASTM A181 grade.	
			11	Flange and flanged fittings shall have raised face and gaskets conforming to ANSI B 16.5. Weld fittings shall be steel, standard weights, black and in accordance with ANSI B 16.9, ANSI B 16.25, ANSI B16.11 and ASTM A 234.	
			12	Push-on fittings shall not be used.	
			13	Pipe having cut (machined) grooves shall have a nominal wall thickness of not less than the wall thickness specified for Schedule 40 pipe of the particular pipe size. Schedule 10 pipe shall not be cut grooved.	
			14	Mechanical joint couplings shall be of the external type, for use with cut or rolled-groove end pipes, fittings, and valves.	
			15	Couplings shall be self-centering, and shall engage and lock-in-place the grooved-end pipes, fittings, and gaskets.	
			16	All couplings shall be of the rigid style. Flexible couplings shall not be used	
			17	Each piping system, after erection, shall be subjected to a pressure test.	
				Section 21 05 23 -General-Duty Valves for Fire Suppression System	
			1	The riser check valve shall be equipped with a removable cover assembly. The riser check valve shall be equipped with gauge connections on the system side and supply side of the valve clapper.	
			2	Riser check valve flanged shall be installed on 125# or 150 ANSI flanges.	
			3	Ball Valves - Size 1" thru 2" shall have a full port, end entry with brass body with threaded connection. Brass stem, chrome plated brass ball, teflon or silicone bronze seat.	

Will Comply	Will Not Comply	N/A			Remarks for Not Complying
				DIVISION 21 - FIRE SUPPRESSION SYSTEM (cont.) **Section 21 05 23 -General-Duty Valves for Fire Suppression System**	
			4	All ball valves shall be readily accessible and free from obstruction	
			5	Butterfly Valves size 2 1/2" thru 12" shall have a housing that is ductile iron body and disc with EPDM disc coating.	
			6	Check Valves shall be installed by the valves listed orientation for installation in the vertical or horizontal position. Check valves shall be U.L. listed for Fire Protection use.	
			7	Drain valves - Size 1" through 2-1/2" shall be U.L. listed for Fire Protection, screw in type bonnet, Integral seat with renewable disc, threaded with one piece bronze body. Listed for service pressure up to 175 psi/12.1 bar, non-shock for cold water. Drain valves shall conform to MSS SP-80 specifications.	
			8	Gate valves size 2 1/2" and up shall be of iron body, flanged connection, bolted bonnet, bronze wedge, brass stem, iron hand wheel non rising stem, inside screw, 125 lb SWP-200 lb. WOG (non-shock).	
			9	Valves installed in insulated piping shall have extended handles to clear insulation.	
				Section 21 05 29 -Hanger and Supports for Fire Suppression System	
			1	All hanger and support components shall be U.L. or F.M. listed for fire protection where applicable.	
			2	Inserts shall be MSS Type 18; carbon steel body and nut, galvanized finish. Basis of design Erico Model # 355	
			3	Upper Attachments top beam clamps MSS Type 23 shall be carbon Steel galvanized finish beam clamp, hardened steel cup point set screw and locknut. Rating is contingent on rod and bolt size. Basis of design Erico Model #300.	
			4	Upper Attachments Bottom Beam Clamp MSS Type 23 – Shall be carbon Steel galvanized finish beam clamp, hardened steel cup point set screw and locknut and retaining clip Model #755c. Rating is contingent on rod and bolt size. Basis of design Erico Model #200.	
			5	Upper Attachments Center Beam Clamp MSS Type 21 shall be malleable iron jaw and square head bolt and nut with galvanized finish. Rating is contingent on rod and bolt size. Basis of design Erico Model #100.	
			6	Clevis Hanger MSS Type 1 shall be carbon steel, galvanized for interior and exterior use, sized to accommodate required insulation. Rating is contingent on rod and bolt size. Basis of design Erico Model #400.	
			7	Pipe Rings MSS Type 10 shall be carbon steel, galvanized for black steel. Rating is contingent on rod and bolt size. Basis of design Erico Model #100.	
			8	Saddle Support MSS Type 38 shall be cast iron saddle, black steel lock nut nipple, cast iron reducer all with galvanized finish. Suitable for standard field cut and threaded galvanized steel pipe. Cast iron floor flange. Basis of design Erico Model #723.	
			9	Welded Steel Bracket MSS Type 32 shall be welded carbon steel rate for 1500 lbs., with galvanized finish. Rating is contingent on rod and bolt size. Basis of design Erico Model #352.	

Will Comply	Will Not Comply	N/A			Remarks for Not Complying
				DIVISION 21 - FIRE SUPPRESSION SYSTEM (cont.) **Section 21 05 29 -Hanger and Supports for Fire Suppression System**	
			10	Riser Clamps MSS Type 8 shall be carbon steel, galvanized finish for black steel or galvanized pipe, plastic coated for cold steel, copper, glass or brass pipe rated for a minimum of 220 lbs. at 3/4" size. Basis of design Erico Model #510.	
			11	Pipe sleeve wall shall be Schedule 40 carbon steel pipe sized to accommodate pipe, insulation and firestopping. If sleeves are field cut coat cut edges with cold galvanizing spray, ZRC or approved substitution.	
			12	Pipe sleeves penetrating floor to below grade or exterior Walls be schedule 40 steel pipe with anchor and water stop hot dip galvanized after fabrication. Sized to accommodate pipe and waterproofing or firestopping. Refer to Division 07 for firestopping requirements. Sleeve length will be sized to allow a minimum of 1/2" extension below floor or exterior side of a wall below grade and 1 1/2" extension above floor and 1/2" extension on interior side of an exterior wall below grade.	
			13	All penetrations of roof shall be in accordance with requirements of Division 07 Thermal and Moisture Protection.	
			14	Provide plastic coating on supports where supports are in contact with copper, aluminum or brass pipe.	
			15	Interior hangers, supports, including attachments that are plain steel shall be primed black prior or after installation.	
			16	Hangers and supports, including attachments, exposed to weather or subject to spillage shall be hot dip galvanized after fabrication.	
			17	The location of hangers and supports shall be coordinated with the structural work to ensure that the structural members will support the intended load.	
			18	Provide hex head nut on rod at top and bottom of clevis hanger yoke, and at each rod connection to intermediate and upper attachment. Rod nuts shall be securely locked in place.	
			19	Hanger rods shall be subject to tensile loading only. Where lateral or axial movement is anticipated, use suitable linkage in hanger rod to permit swing.	
			20	Provide hex head nut on rod at top and bottom of clevis hanger yoke, and at each rod connection to intermediate and upper attachment. Rod nuts shall be securely locked in place.	
			21	Hanger rods shall be subject to tensile loading only. Where lateral or axial movement is anticipated, use suitable linkage in hanger rod to permit swing.	
			22	Hangers shall be fabricated to permit adequate adjustment after erection while still supporting the load. Turnbuckles shall be provided where required for vertical adjustment of the piping.	
			23	Supports for vertical piping shall be located at each floor or at intervals of not more than 15 feet and at intervals of not more than 8 feet from end of risers. Where supports are provided on intermediate floors spaced 15 feet or less between floors, no additional supports are required other than those specified for end of risers.	
			24	A hanger or support shall be provided adjacent to each piece of equipment to ensure that none of the pipe weight is supported from the equipment.	
			25	All hangers and supports shall meet the requirements of NFPA-13, 2013 Edition, Chapter 9.	

Will Comply	Will Not Comply	N/A			Remarks for Not Complying
				DIVISION 21 - FIRE SUPPRESSION SYSTEM (cont.) **Section 21 05 29 -Hanger and Supports for Fire Suppression System**	
			26	Hanger centerline spacing shall be reduced by 50% in areas of concentrated valves and/or fittings, also no more than a maximum distance of 12 inches from valves, fittings and/or couplings, or 24 inches from a change in direction.	
			27	Parallel piping may be supported by trapeze hangers consisting of steel angle, channel, or beam suspended by steel rods attached to upper structure. Piping may be supported above, or suspended below, the angle, channel, or beam.	
			28	Sleeves shall not be installed in structural members, except where indicated or approved.	
			29	Each sleeve shall extend through its respective wall, floor, or roof, and shall be cut flush with each surface, except as indicated otherwise.	
			30	Unless otherwise indicated, sleeves shall be of a size to provide a minimum of 1/4 inch clearance all around between the pipe and inside of sleeve, or between jacket over insulation and sleeve.	
			31	Provide firestopping, waterproofing and/or insulation as required. (Refer to Div 07).	
			32	Sleeves are not required in existing structures where openings through existing concrete floors, walls, or roof are core drilled.	
			33	Pipe Seals shall be composition Plastic Pressure Plates, zinc coated bolts, nuts and metal parts, composition rubber sealing element designed for long term stability rated for temperatures of 40F to +250F. Basis of design Thunderline Corp. Link Seal LS Series.	
			34	Provide pipe seals for all pipe sleeves used in external walls, floor slabs on grade and upper floors where spillage may occur.	
				Section 21 05 53 -Identification for Fire Suppression and Equipment	
			1	Coordinate installation of identifying devices with completion of covering and painting of surfaces where devices are to be applied.	
			2	Pipe markers shall be permanently curled for snap on installation for pipe sizes (including insulation) up to 6" diameter. For external diameters above 8". Marker shall be secured using cable ties for indoor use and stainless steel banding or ultraviolet resistant plastic for exterior use. Markers for outdoor installation shall be over-laminated with Tedlar on polyester ultraviolet to avoid damage and fading. Markers shall identify the pipe contents and direction of flow through 360 degree visibility range. Marker size, letter size, letter color, wording and background color shall be in accord with ANSI A13.1 – Scheme for the Identification of Piping Systems. Basis of design Marking Services Inc. Model MS-970 Coiled Plastic Markers for indoor use and Model MS-995 Maxilar Marker for exterior use.	
			3	Valve tags for indoor shall be 9 gauge brass, 1 1/2 inch round, with 1/4 inch high black pipe service letter abbreviation above 1/2 inch high black valve number. Pipe service letter abbreviation shall be in accord with legend on drawings. Valve tag attachment shall be 4 ply 0.018 copper wire meter seal or #6 solid brass bead chain with locking link. Basis of design Marking Services Inc.	

Will Comply	Will Not Comply	N/A			Remarks for Not Complying
				DIVISION 21 - FIRE SUPPRESSION SYSTEM (cont.) **Section 21 05 53 -Identification for Fire Suppression and Equipment**	
			4	Valve tags for indoor shall be 1/16 inch thick plastic, 1-1/2" round, with ¼ inch high black pipe service abbreviation above 1/2 inch high black valve number. Pipe service letter abbreviation shall be in accord with legend on drawings. Color of valve tag shall match pipe marker color. Valve tag attachment shall be 4 ply 0.018 copper wire meter seal or #6 solid brass bead chain with locking link. Basis of design Marking Services Inc.	
			5	Valve tags for outdoor service shall be 19 gauge brass, 1 1/2 inch round, with 1/4 inch high black pipe service letter abbreviation above 1/2 inch high black valve number. Pipe service letter abbreviation shall be in accord with legend on drawings. Valve tag attachment shall be 4 ply 0.018 copper wire meter seal or #6 solid brass bead chain with locking link. Basis of design Marking Services Inc.	
			6	Indoor equipment nameplates shall be 1/16 inch thick plastic with black satin surface and white core. Lettering shall be engraved through the surface color to expose the core color. Plate size shall be a minimum of 2-1/2 inch by 4 inch, with 3/4 inch high lettering for equipment and 3/4 inch by 2 1/2 inch, with 3/16 inch high lettering for ceiling grid labeling. Equipment identifying name and number shall be in accord with schedules on the Contract Documents. Plate manufacturer shall furnish pre-drilled hole locations for pop riveting. Where pop riveting is not suitable, a suitable adhesive for permanently attaching plate to equipment shall be provided. Basis of design Marking Services Inc. Model MS-215 Max-Tex.	
			7	Outdoor equipment nameplates shall be 125 Mil rigid plastic constructed of printed legend sealed between two layers of chemically-resistant plastic to resist ultraviolet damage. Plate size shall be a minimum of 2-1/2 inch by 4 inch, with 3/4 inch high lettering for equipment. Equipment identifying name and number shall be in accord with schedules on the Contract Documents. Plate manufacturer shall furnish pre-drilled hole locations for pop riveting. Where pop riveting is not suitable, a suitable adhesive for permanently attaching plate to equipment shall be provided. Basis of design Marking Services Inc. Model MS-215 Max-Tex.	
			8	Coordinate installation of identifying devices with locations of access panels and doors.	
			9	Install identifying devices before installing acoustical ceilings and similar concealment.	
				Section 21 07 00 -Fire Suppression Insulation	
			1	Piping Insulation: Foamglas: Rigid, preformed sections of 100% rigid cellular glass dimensionally complying with ASTM C585 standards, non-absorptive of moisture after immersion, water vapor permeability 0.00 perm/in. impervious to common acids (except hydrofluoric), non-combustible, 100 PSI compressive strength when capped with hot asphalt, 8.5 #/cu.ft. density, thermal conductivity 0.33 BTU In./Hr./Sq.Ft./F @ 50°F. Basis of design Pittsburgh Corning Foamglas.	
			2	Equipment Insulation: Foamglas: Sections of 100% rigid cellular glass, non- absorptive of moisture after immersion, water vapor permeability 0.00 perm/in., impervious to common acids (except hydrofluoric), non-combustible, 100 PSI compressive strength when capped with hot asphalt, 8.5 #/cu.ft. density, thermal conductivity 0.32 BTU In/Hr./Sq.Ft./F @ 50°F. Basis of design Pittsburgh Corning Foamglas	

Will Comply	Will Not Comply	N/A			Remarks for Not Complying
				DIVISION 21 - FIRE SUPPRESSION SYSTEM (cont.) **Section 21 13 00 -Fire Suppression System**	
			1	The entire fire protection system shall be fabricated, installed and tested by a company approved by owner. Contractor shall qualify himself as to experience, insurability and capability by submitting an "AIA" and a 305 contractor's qualification statement. Satisfactory completion of similar projects is required.	
			2	The installer shall perform all required acceptance tests, complete the contractor's material and test certificate and forward the certificates to the authority having jurisdiction prior to asking for approval of the installation.	
			3	The fire riser main drain and inspector's test shall be piped hard connected to storm system where possible. Plumbing contractor shall provide plumbing standpipe point of connection within building. Where connection to storm system is not available contractor shall route piping to the exterior of the building and discharge 12" above grade. Provide splash block. The inspector's test valve shall be accessible without tools or ladders.	
			4	The fire department connection shall be located 40 feet from building and coordinated with fire truck access and fire hydrant location.	
			5	All piping and attached appurtenances subjected to system working pressure shall be hydrostatically tested at 200 psi (13.8 bar) and shall maintain that pressure without loss for 2 hours.	
			6	Portions of systems normally subject to system working pressures in excess of 150 psi (10.4 bar) shall be tested as described in NFPA 13, 2013 Edition 25.2.1.2 at a pressure of 50 psi (3.5 bar) in excess of system working pressure.	
			7	The test pressure shall be read from a gauge located at the low elevation point of the system or portion being tested.	
			8	Additives, corrosive chemicals such as sodium silicate, or derivate of sodium silicate, brine, or other chemicals shall not be used while hydrostatically testing systems or stopping leaks.	
			9	Provisions shall be made for the proper disposal of water used for flushing or testing.	
			10	The fire suppression system shall consist of a wet sprinkler system to provide coverage for all interior areas of the buildings.	
			11	Provide dry type sprinklers on wet pipe system where possible where freeze protected coverage is required. Where dry type sprinklers cannot provide required coverage a dry pipe system shall be provided.	
			12	The fire suppression system shall consist of a dry pipe sprinkler system and or dry type sprinklers to provide coverage for all areas of the buildings where temperature cannot be maintained above 40 degrees.	
			13	The sprinkler systems shall consists of single and multiple zones serving all buildings.	
			14	The water supply to the fire protection system shall be through the County/City street main.	
			15	Provide sprinkler heads of type indicated and to suit each location.	

Will Comply	Will Not Comply	N/A			Remarks for Not Complying
				DIVISION 21 - FIRE SUPPRESSION SYSTEM (cont.) **Section 21 13 00 -Fire Suppression System**	
			16	All sprinkler heads shall have a quick response listing.	
			17	Sprinkler heads in areas with ceilings shall be pendent type with white finish and two piece escutcheon. Sprinkler head guards are to be installed in areas where heads are exposed to damage. Sprinklers located in ceilings with a black finish shall be provided with black sprinklers.	
			18	Sprinkler heads in utility areas (mechanical rooms, etc.) with no ceiling (no tiles or gypsum board) shall be a brass upright sprinkler type. Sprinkler heads in finished spaces with no ceilings (auditoriums, gyms, classroom, etc.) be upright and finish coordinated with architect. Sprinkler head guards shall be installed in areas where heads are exposed to damages. Sprinklers located in a gym shall have heavy duty sprinkler head guards.	
			19	Each floor level of stairs shall be provided with full sprinkler coverage including below intermediate landings unless fully enclosed by walls preventing access. Omission of sprinklers is not acceptable.	
			20	Sidewall heads mounted on a wall or soffit shall be provided with white with two escutcheon.	
			21	Pendent sprinklers shall be installed as 2x 4 tiles are to be treated as 2 x 2 tiles and sprinkler located in the center of the 2 x 2 tiles.	
			22	Concealed flush type sprinklers shall be installed as directed by architect.	
			23	All sprinklers shall be symmetrical in the layout.	
			24	Polyester coated pendent sprinklers shall be installed in areas prone to high moisture (showers, locker Rooms, etc).	
			25	Sprinkler heads installed in exterior corridors, under canopies and all areas subject to freezing conditions shall be dry type sprinklers. (Pendants and sidewalls).	
			26	Sprinklers located in Kiln Rooms shall be high temperature type sprinklers (286 degrees). Sprinklers shall be located away from kiln to avoid heat plume if kiln is opened at high temperature.	
			27	Orifice size for all sprinkler heads shall be 1/2 inch unless conditions occur which will require another size.	
			28	Sprinkler piping and fitting shall be in accordance with applicable local codes or regulations and Section 21 05 16 – Expansion Fittings and Loops for Fire Protecting Piping, but it shall be not less than the standards of NFPA 13.	
			29	Sprinklers shall be supplied by flexible hose fittings where possible. Only Braided Flexible hose fittings are acceptable. Manufacturer's equivalent pipe length shall be indicated in hydraulic calculations.	
			30	Sprinkler valves shall conform to applicable requirements of Section 21 05 23 – General-Duty Valves for Fire Suppression System and to NFPA 13.	
			31	Sprinkler pipe hangers and supports shall be subject to applicable requirements of NFPA 13, and the more stringent requirements of Section 21 05 29 – Hangers and Supports for Fire Suppression Piping and Equipment for applicable items.	
			32	Provide a surface mounted cabinet located at fire riser location with spare heads of each type used and wrenches to fit heads in accordance with NFPA 13.	

Will Comply	Will Not Comply	N/A			Remarks for Not Complying
				DIVISION 21 - FIRE SUPPRESSION SYSTEM (cont.) **Section 21 05 53 -Identification for Fire Suppression and Equipment**	
			33	Buildings where the highest story is located more than 30 feet above the lowest level of fire department vehicle access shall be provided with a Class I manual standpipe system per Florida Building Code FBC 905.3.1.	
				Engineer shall coordinate with local fire marshal to located hose valves on main landings. Engineer shall coordinate with the architect to provide chases to locate hose valve cabinets and conceal piping.	
			34	Stages exceeding 1,000 square feet in area shall be equipped with a Class III wet standpipe system with 1-1/2" and 2-1/2" hose connections on each sided or the stage in accordance with FBC 905.3.4. Provide hose valves in cabinets.	
			35	All hose valves inside the building shall be cast brass.	
			36	Provide a yard Siamese connection branded "AUTO. SPKR." with caps and chains, check valve and ball drip as directed by the local official for connection by the fire department.	
			37	Valve cabinets shall be 10" deep recessed type with continuous hinge, 180 degree door swing. Basis of design Potter Roemer Model 1810 and Model 1830.	
			38	The sprinkler piping shall be hydraulically designed and shall be governed by NFPA 13 2013 Edition, Chapter 23 and 26.	
			39	The sprinkler system piping and head coverage for the building shall be based on light hazard occupancy. Kitchens, Storage Rooms, Mechanical Rooms, etc., shall be based on ordinary hazards. Flammable Storage Rooms shall be extra hazard.	

Will Comply	Will Not Comply	N/A			Remarks for Not Complying
				DIVISION 22 - PLUMBING SYSTEM **Section 22 00 10 - Plumbing Demolition**	
			1	The work of this section shall include furnishing all labor, materials and equipment for the demolition and removal of all existing fixtures, piping and equipment as indicated in the Contract Documents.	
			2	Provide protection of all fixtures, equipment and appurtenances to remain from damage during demolition.	
			3	Remove piping, fixtures, appurtenances and equipment where indicated on the drawings or where removal is required for completion of new work under this contract.	
			4	Take all necessary precautions to protect existing structure, its contents and areas of the site not within demolition limits. Take any measures necessary to protect personnel from hazards.	
			5	Where existing materials or assemblies are to be removed, modified, relocated or incorporated in the work take care to prevent damage. Provide temporary protection where new or existing openings exist in roof or walls as required to secure building and to keep weather-tight.	
			6	Where finishes are indicated to be patched and repaired, do demolition work required with care, to prevent damage to surrounding areas and to facilitate the patching and repairing work.	
			7	During the progress of the work, efforts shall be made to keep dust to a minimum.	
			8	Remove all trash and debris from the project as the work progresses and dispose of as directed by the Contracting Officer.	
				Section 22 00 13 - Plumbing Systems	
			1	Provide all plumbing fixtures and trim as indicated on the drawings. All fixtures shall be connected to the plumbing systems as indicated and required for proper operation.	
			2	Sanitary Waste and Vent Systems: Provide a complete sanitary, waste and vent system for all fixtures and equipment in the building. All waste from the building shall discharge by gravity 5 ft. outside of building. Certain areas require drainage pumps which will discharge to the gravity waste system as shown on the drawings. All grease waste shall be discharged through a grease interceptor to sanitary system.	

Will Comply	Will Not Comply	N/A			Remarks for Not Complying
				DIVISION 22 - PLUMBING SYSTEM (cont.) **Section 22 00 13 - Plumbing Systems**	
			3	Water Supply System: Provide a complete water supply system for all fixtures and equipment in the building including domestic water heaters and all required components. The domestic water system shall connect to 5'-0" outside of building. Local connections to fixtures and equipment shall be not less than full size of the fittings on the fixtures and equipment, and runouts and risers serving same shall be as shown and not less than one pipe size larger than the fittings on the fixtures and equipment. Provide isolation valves at every branch off water mains where accessible and provide approved gate or compression stops at every connection to fixtures and equipment. Provide shock arresters in accordance with the Plumbing and Drainage Institute Standard PDI WH201. Provide access door at each location of shock arrester. Coordinate access door locations with the architect. Pressure gauges shall be provided, on the inlet and outlet of all pumps, at the connection to each piece of equipment connected to by the plumbing contractor and at the main service valve in the building. Thermometers shall be provided, on the inlet and outlet of each water heater, HWR pipe at the discharge of the circulator pump.	
			4	Storm Drainage System: Provide a complete storm drainage system to serve roof drains and area drains as shown on the drawings. All storm water from the building shall discharge by gravity to 5 ft. outside of building. All condensate drain connections to the building storm system at the lower levels subject to backflow shall be equipped with back water valves. All rainleader piping and roof drain bodies shall be insulated within the building to above grade. Provide PVC jacket over all exposed, insulated pipe.	
			5	Fuel Gas Systems: Fuel gas systems shall be designed and installed in accordance FBC Fuel Gas Code 6th Edition (2017) and SREF. The Contractor shall coordinate the gas meter piping location with the gas company. The work of this Section shall include underground and above ground gas pipe and components from the property line to equipment within building as noted on drawings.	
			6	Water Hammer Arrestors: Water hammer arresters shall be lead free piston type and ANSI/ASSE 1010 2004 certified. Basis of design manufactured by J.R. Smith, Sioux Chief, and Watts. Water hammer arresters shall be located above tile ceilings where possible. Access panels shall be provided hard ceilings where required to access water hammer arresters.	

Will Comply	Will Not Comply	N/A			Remarks for Not Complying
				DIVISION 22 - PLUMBING SYSTEM (cont.) **Section 22 00 13 - Plumbing Systems**	
			7	Backflow Preventers: Provide ASSE 1024 listed backflow prevention for ice makers if integral air gap is not provided with ice maker installed on project. Dual check valve designed for installation on potable water piping to protect against both back siphonage and back pressure of polluted water into the potable water supply.	
			8	After all domestic cold water and hot water supply and return piping has been flushed free of foreign matter, and within 30 days prior to turning the building over to the Owner, this piping shall be sterilized.	
			9	Piping in drawings may be shown offset for clarity of fixtures, equipment and routing intent for multiple piping systems that may be installed in close proximity in the field. Contractor shall coordinate with all disciplines and provide offset as required to route pipe.	
				Section 22 05 00 - Common Work Results for Plumbing System	
			1	All work shall comply with applicable requirements set forth in the General Conditions and applicable codes as follows: · Florida Building Code 6th Edition (2017) Building . Florida Building Code 6th Edition (2017) Plumbing · Florida Building Code 6th Edition (2017) Accessibility · Florida Building Code 6th Edition (2017) Fuel Gas · Life Safety Code – NFPA 101, 2015 w/ Florida Amendments · Florida Fire Prevention Code 6th Edition (2017) · State Requirements for Educational Facilities (SREF) · Local codes or standards incorporated by the authority having jurisdiction.	
				Section 22 05 10 - Basic Materials and Methods for Plumbing System	
			1	Concrete for equipment bases and pads shall be 3000 p.s.i. design mix prepared in accord with ASTM C94. Cement shall be in accord with ASTM C150. Aggregate shall be fine sand in accord with ASTM C33. Water shall be clean, fresh, and drinkable	
			2	Fabricated steel supports may be shop or field fabricated, and shall be in accordance with de-tails on drawings	
			3	Steel members shall be saw cut, with corners ground smooth, and shall be assembled with welded or bolted connections at Contractor's option. Connections shall be in accord with specified AISC Publications	
			4	Steel angles, channels, and plate shall be in accordance with ASTM A36.	
			5	Steel members, including fasteners, exposed to weather shall be galvanized.	

Will Comply	Will Not Comply	N/A			Remarks for Not Complying
				DIVISION 22 - PLUMBING SYSTEM (cont.) **Section 22 05 19 - Meters and Gauges for Plumbing Piping**	
			1	Thermometers and Accessories: Industrial Reading Non-Mercury Type: Construction: Adjust angle, 9" scale with lagging extension brass well, of the blue dye (only) fill type and guaranteed accurate to + one scale division. Thermometer shall have glass front to exclude dirt and dust. Thermometers containing mercury are not acceptable, they shall be organically filled. Thermometers installed outdoors shall be specifically designed and weatherproofed for this application. Temperature range 30/300. Basis of design Trerice Type BX91403 or Weksler A935AF5 Bi Metal Dial Type: Construction: 5" dial, adjust angle, with lagging brass extension well. Stainless steel case bezel, fittings and stem. Head assembly sealed against dust, fumes and moisture with glass window. Accuracy of ± 1% of thermometer range and also be externally adjustable. Thermometer Well: Construction - Brass or ductile iron body, with lagging extension, length to accommodate thermometer stem length. Basis of design Weksler Type AF or approved substitution.	
			2	Pressure Gauges and Accessories: Pressure Gauges: Construction: 4 1/2" dial, high impact polypropylene case, 1/4" bottom connection, 1/2% accuracy in accordance with ANSI B40.1 1974 Grade A. Stainless steel rotary with stainless steel pinion gear; stainless steel sector gear; stainless steel link. Stainless steel bourdon tube, 316 stainless steel socket and slotted adjustable pointer. Case of black high impact polypropylene suitable for surface or direct mounting and with bottom connection. For outdoor locations, provide glycerine filled gauges. Range: Ranges shall be so selected to indicate pressure reading in midpoint of scale selected. Basis of design Weksler Model AA44-2 and AY44-2 or approved substitution. Manifold Valves (Trumpet Valve) (Water): - 2, 3 or 4 port - Brass body, spring return, push button brass valves, 1/4" compression connections. Gauge tap at top, calibrated gauge test port with gauge cock. 125 PSIG rated, 20°F to 220°F range. Basis of design Flow Conditioning Corporation Hydronic Indicator System or approved substitution. Piston type snubber: Brass body, threaded connections, suitable for mounting horizontal or vertical. (Required at pump inlet and discharge.) Basis of design Weksler Type RS 1 or approved substitution. Filter type snubber: Brass body, threaded connection, micro metallic stainless steel filter. (For all gauges except pump service). Basis of design Weksler Type BW42 or approved substitution.	
			3	Pressure and Temperature Test Ports: Brass or stainless steel body with threaded cap and gasket, length to extend past insulation. Two self-closing valves with intermediate pocket for added pressure protection. Sized for standard 1/8" probe. Range: 20F to 230F.Rating: 250 PSIG water. Basis of design Peterson Equipment Co., Inc. "Pete's Plug" Model 110 or 110XL or approved substitution.	
			4	Pressure and Temperature Test Kit: Pressure temperature test kits consisting of 0 100 PSIG pressure gauge with adapter, 25 125°F testing thermometer, 0 220F testing thermometer, gauge adopted and protective carrying cast and master air vent assembly. Provide 2 kits. Basis of design Peterson Equipment Co., Inc., Series 1500 Test Kit or approved substitution.	

Will Comply	Will Not Comply	N/A			Remarks for Not Complying
				DIVISION 22 - PLUMBING SYSTEM (cont.) **Section 22 05 23 - General-Duty Valves for Plumbing System**	
			1	Backwater Valves: Series coated cast iron backwater valve, offset type, bronze fixed swing-check assembly, bolted gasketed cover, and no-hub connections.	
			2	Balancing Cock - Potable water service: Size 1/2" thru 3". Bronze body threaded or sweat connection, brass valve, "O" ring sealed, calibrated nameplate, indicator pointer, dual stage orifice, read out ports equipped with integral composition check valve, 125 psi rated, 20F to 220F range.	
			3	Ball Valves - Potable water service: Size 1/4" thru 2½". Lead Free, bronze body, threaded or sweat connection, stainless steel stem, stainless steel or bronze full ported ball, Teflon or silicone bronze seat, steel lever handle, indicator stop, 150 lb. 600 WOG. Basis of design Nibco T-585-66-LF or S-585-66-LF. Valves installed in insulated piping to have extended handles to clear insulation. Stem extension shall be made of a non-thermal conducting material with a sleeve to form an insulated vapor seal after the valve is insulated. Size 3" thru 4". Lead Free Butterfly Valve, ductile iron body, lug connection, stainless steel stem, aluminum disk, EDPM rubber stem and body seal, EDPM rubber liner, 200 psi. Install between ASME Class 125/150 flanges. Basis of design Nibco LD-2000	
			4	Check Valves - Portable Water Service Horizontal swing check valve: Size 1/2" thru 2". Lead Free, bronze body thread or sweat connection, "Y" pattern, bronze seat, renewable teflon or bronze swing disc, pressure rated 200 psi working pressure. Basis of design Nibco T 413 Y-LF or S 413 Y-LF. Size 2-1/2" and up. Lead Free, class 125, 200 psi working pressure, cast iron, bolted connection, bronze seat. Renewable bronze disc. Basis of design Nibco F-910 or approved substitution. Spring check valve: Size 1/2" thru 2". Lead Free, bronze body thread or sweat connection, "Y" pattern, lead free, inline lift type, spring actuated, and resilient discs. Temperature rating 300o. Basis of design Nibco T 480 Y-LF or S 480 Y-LF or approved substitution.	
			5	Relief Valve: Shall have ½" bronze body and spring case with stainless steel ball and cadmium plated steel spring. Suitable for duty to 300 PSIG at 300F (non-shock rating). Pressure range 25 to 100 PSIG (adjustable). Designed to relieve excessive system pressure from isolated secondary chilled water system to primary ice water system which may be under pressure. Valve to open upon increase in pressure above setpoint and instantly close upon relief of excess pressure. Valve loading adjustable by spring within pressure range listed above. Basis of design Watson McDaniel Type R relief valve or approved substitution.	
			6	Provide shut off valves on the inlet and outlet of each piece of equipment at the take-off of each major branch from a header and at the base of each pipe riser in order to facilitate service.	
			7	Provide drain valves at the base of each pipe riser and at each piece of equipment to facilitate service.	
			8	Provide access panel or cabinet for lab valves as noted on floor plans. Contractor shall maintain the rating of walls in which panels and cabinets are installed.	

Will Comply	Will Not Comply	N/A			Remarks for Not Complying
				DIVISION 22 - PLUMBING SYSTEM (cont.) **Section 22 05 29 - Hanger and Supports for Plumbing Piping and Equipment**	
			1	Inserts, Shells and Upper Attachments: Inserts; MSS Type 18; malleable iron body and nut, galvanized finish, opening in top of insert for reinforcing rod, lateral adjustable. Rated for 1,140 lbs. Basis of design Anvil Fig. 282 or approved substitution. Shells: Steel shell and expander plug, snap off end fastener. Basis of design Phillips Concrete Fasteners Red Head or approved substitution. Upper Attachments: Top beam clamps; MSS Type 19: Malleable iron galvanized finish clamp, hardened steel cup point set screw and locknut. Rating is contingent on rod and bolt size. Basis of design Anvil Fig. 94 or approved substitution. Bottom Beam Clamp; MSS Type 23: Malleable iron galvanized finish clamp, hardened steel cup point set screw and locknut, and retaining clip. Rating is contingent on rod and bolt size. Basis of design Anvil Fig. 86 Clamp and Fig. 89 Retaining Clip (or Fig. 87) or approved substitution. Welded Beam Attachment; MSS Type 22: Carbon steel suitable for eye rod or rod and locknut, rating is contingent on rod and bolt size. Basis of design Anvil Fig. 66 or approved substitution. Center Beam Clamp; MSS Type 21: Malleable iron jaw and square head bolt and nut with galvanized finish. Rating is contingent on rod and bolt size. Basis of design Anvil Fig. 134 or approved substitution. Center Beam clamp; MSS Type 29: Forged steel, weldless eye nut, tie rod to secure lamp to beam all with galvanized finish, rating is contingent on rod and bolt size. Basis of design Anvil Fig. 292 or 292L or approved substitution.	
			2	Pipe Hangers: Clevis Hanger; MSS Type 1: Carbon steel, galvanized for interior and exterior use, sized to accommodate required insulation. Rating is contingent on rod and bolt size. Basis of design Anvil Fig.260 or 300 or approved substitution. Pipe Rings; MSS Type 10: Carbon steel, galvanized for black steel and insulated pipe copper or copper plated or rubber coated for copper pipe. Threaded swivel, sized to accommodate required insulation. Rating is contingent on rod and bolt size. Basis of design Anvil Fig. 69 or CT-69 for copper pipe or approved substitution. Adjustable Roller Hanger; MSS Type 43: Cast iron roll, carbon steel yoke rod roll and hex nut with galvanized finish. Sized to accommodate insulation. Rating is contingent on rod and bolt size. Basis of design Anvil Fig. 181 or approved substitution.	
			3	Hanger Rods - Size 3/8" and up: All thread steel rod electro galvanized. Rods may be reduced one size for double rod hangers with 3/8" minimum diameter, or when other paragraphs require a minimum of 2 hangers per section provided the minimum diameter of 3/8" in maintained.	

Will Comply	Will Not Comply	N/A			Remarks for Not Complying
				DIVISION 22 - PLUMBING SYSTEM (cont.) **Section 22 05 29 - Hanger and Supports for Plumbing Piping and Equipment**	
			4	Supports: Pipe Saddle; MSS Type 38: Cast iron saddle, black steel lock nut nipple, cast iron reducer all with galvanized finish. Suitable for standard field cut and threaded galvanized steel pipe. Cast iron floor flange. Basis of design Anvil Fig. 264 Saddle, Fig. 63 Floor Flange or approved substitution. Pipe Saddle Cold Piping: MSS Type 40. Single bonded unit consisting of a galvanized metal shield and a molded section of rigid polyurethane foam insulation. Rigid urethane foam shall have a density of 4 pounds per cubic foot, a thermal conductivity of 0.13 Btu.in/sq.ft./hr.oF at 75F mean temperature. Insulation thickness to be equal to thickness specified for pipe being supported. Adjustable Pipe Roll and Base; MSS Type 46: Cast iron base plate steel stand and roll, adjusting screws with galvanized finish. Basis of design Anvil Fig. 274 or approved substitution. Welded Steel Bracket; MSS Type 32: Welded carbon steel rate for 1500 lbs., with galvanized finish. Rating is contingent on rod and bolt size. Basis of design Anvil Fig. 195 or approved substitution. Riser Clamps; MSS Type 8: Carbon steel, galvanized finish for black steel or galvanized pipe, plastic coated for cold steel, copper, glass or brass pipe rated for a minimum of 220 lbs. at 3/4" size. Basis of design Anvil Fig. 261 or approved substitution.	
			5	Accessories: Protective Shields; MSS Type 40: Carbon steel, galvanized minimum of 12" length sized for required insulation. Basis of design Anvil Fig. 167 or approved substitution. Protective Saddles; MSS Type 39: Carbon steel plate, minimum of 12" length, sized for required insulation. Basis of design Anvil Fig. 160 thru 165 or approved substitution. Steel Turnbuckle; MSS Type 13: Forged steel, galvanized finish with locknuts. Rated at a minimum of 730 lbs. at 3/8" size. Basis of design Anvil Fig. 230 or approved substitution. Steel Clevis; MSS Type 14: Forged steel, galvanized finish with steel pin and cotter pin. Rated for a minimum of 730 lbs. at 3/8" size. Basis of design Anvil Fig. 299 or approved substitution. Weldless Eye Nut; MSS Type 17: Forged steel, galvanized finish. Rated for a minimum of 730 lbs. at 3/8" size. Basis of design Anvil Fig. 290 or 290L or approved substitution.	
			6	Pipe Sleeves: Wall: Schedule 40 carbon steel pipe sized to accommodate pipe. If sleeves are field cut, coat cut edges with cold galvanizing spray, ZRC or approved substitution.	
			7	Pipe Sleeves - Floor Slab or Exterior Stem Walls below Grade: Copper domestic water pipe use 6 mil poly red and blue sleeving. Use two tie wraps as the clamp, wrap twice around the pipe. PVC cast it in the slab. Cast iron cast it in the slab	

Will Comply	Will Not Comply	N/A			Remarks for Not Complying
				DIVISION 22 - PLUMBING SYSTEM (cont.) **Section 22 05 29 - Hanger and Supports for Plumbing Piping and Equipment**	
			8	Pipe Sleeves - Sized to accommodate pipe. Sleeve length will be sized to allow a minimum of 1/2" extension below floor or exterior side of a wall below grade and 1 1/2" extension above floor and 1/2" extension on interior side of an exterior wall below grade. Basis of design Thunderline Corp. Link Seal Wall Sleeve or approved substitution. Roof: All penetrations of roof to be in accordance with requirements of Division 07 Thermal and Moisture Protection.	
			9	Secure sleeves to forms for concrete construction. Ensure sleeves are not disengaged or misaligned by concrete placement operations.	
			10	Provide temporary cap for open end of sleeves to prevent entrance of concrete	
			11	Provide temporary internal bracing where required preventing distortion of sheet metal sleeves by concrete placement operations.	
			12	Sleeves shall not be installed in structural members, except where indicated or approved.	
			13	Furnish sleeves to masonry contractor in advance of masonry work. Furnish dimensioned drawings indicating exact location of sleeves.	
			14	Each sleeve shall extend through its respective wall, floor, or roof, and shall be cut flush with each surface, except as indicated otherwise.	
			15	Sleeves passing through floors in wet areas, such as areas containing plumbing fixtures or floor drains, shall extend a minimum of 4 inches above the finished floor. Sleeves in wet areas shall be enclosed with 4 inch concrete curb.	
			16	Unless otherwise indicated, sleeves shall be of a size to provide a minimum of 1/4 inch clearance all around between the pipe and inside of sleeve, or between jacket over insulation and sleeve.	
			17	Provide membrane clamping devices on sleeves for waterproof floors.	
			18	Provide firestopping, waterproofing and/or insulation as required. Refer to Division 07.	
			19	Sleeves are not required in existing structures where openings through existing concrete floors, walls, or roof are core drilled.	
			20	Pipe Seals: Composition Plastic Pressure Plates, zinc coated bolts, nuts and metal parts, composition rubber sealing element designed for long term stability rated for temperatures of 40F to +250F. Provide pipe seals for all pipe sleeves used in external walls, floor slabs on-grade, and upper floors where spillage may occur. Basis of design Thunderline Corp. Link Seal LS Series or approved substitution.	
			21	Fabricated Steel Supports: Steel for supports shall be saw cut, with sharp edges ground smooth. After fabrication remove all foreign material, including welding slag and spatter, and leave ready for painting or galvanizing, as applicable.	
			22	Where supports are in contact with copper pipe provide copper plated support, or wrap pipe with sheet lead.	

Will Comply	Will Not Comply	N/A			Remarks for Not Complying
				DIVISION 22 - PLUMBING SYSTEM (cont.) **Section 22 05 29 - Hanger and Supports for Plumbing Piping and Equipment**	
			23	Where supports are in contact with glass, aluminum or brass pipe provide plastic coating on supports, or wrap pipe with sheet plastic.	
			24	General interior supports, including attachments and pipe supports that are plain steel shall be cleaned of all rust, primed and painted black within one week of installation. At substantial completion all supports shall be free of rust and in a "like new condition".	
			25	Hangers and supports, including attachments & pipe supports, exposed to weather or subject to spillage shall be galvanized after fabrication. At substantial completion all supports shall be free of rust and in a "like new condition".	
			26	Fabricated steel supports exposed to weather (including pipe supports) or subject to spillage shall be galvanized after fabrication, primed and painted black within one week of installation. Cut, welded, drilled, or otherwise damaged surfaces of galvanized coating shall be repaired. At substantial completion all supports shall be free of rust and in a "like new condition".	
				Section 22 05 53 - Identification for Plumbing Equipment	
			1	Plastic Labels for Equipment: Material and Thickness: Multilayer, multicolor, plastic labels for mechanical engraving, 1/8 inch thick, and having predrilled holes for attachment hardware. Letter Color: White. Background Color: Black. Maximum Temperature: Able to withstand temperatures up to 160 deg F. Minimum Label Size: Length and width vary for required label content, but not less than 2-1/2 by 3/4 inch. Minimum Letter Size: 1/4 inch for name of units if viewing distance is less than 24 inches, 1/2 inch for viewing distances up to 72 inches, and proportionately larger lettering for greater viewing distances. Include secondary lettering two-thirds to three-fourths the size of principal lettering. Fasteners: Stainless-steel rivets or self-tapping screws. Adhesive: Contact-type permanent adhesive, compatible with label and with substrate.	
			2	Pipe Labels: General Requirements for Manufactured Pipe Labels: Preprinted, color-coded, with lettering indicating service, and showing flow direction. Pre-tensioned Pipe Labels: Pre-coiled, semi-rigid plastic formed to partially cover circumference of pipe and to attach to pipe without fasteners or adhesive. Pipe Label Contents: Include identification of piping service using same designations or abbreviations as used on Drawings and an arrow indicating flow direction. Flow-Direction Arrows: Integral with piping system service lettering to accommodate both directions, or as separate unit on each pipe label to indicate flow direction. Lettering Size: At least 1-1/2 inches high.	
			3	Valve Tags: Stamped or engraved with 1/4-inch letters for piping system abbreviation and 1/2-inch numbers. Tag Material: Brass, 0.032-inch or Stainless steel, 0.025-inch minimum thickness, and having predrilled or stamped holes for attachment hardware. Fasteners: Brass wire-link or beaded chain or S-hook.	

Will Comply	Will Not Comply	N/A			Remarks for Not Complying
				DIVISION 22 - PLUMBING SYSTEM (cont.) **Section 22 05 29 - Hanger and Supports for Plumbing Piping and Equipment**	
			4	Install or permanently fasten labels on each major item of mechanical equipment.	
			5	Locate equipment labels where accessible and visible.	
			6	Pipe Label Installation: Locate pipe labels where piping is exposed or above accessible ceilings in finished spaces; machine rooms; accessible maintenance spaces such as shafts, tunnels, and plenums; and exterior exposed locations. Near penetrations through walls, floors, ceilings, and inaccessible enclosures. At access doors, manholes, and similar access points that permit view of concealed piping. Near major equipment items and other points of origination and termination. Spaced at maximum intervals of 25 feet along each run. Reduce intervals to 10 feet in areas of congested piping and equipment. Identification of potable and non-potable water. Pipe Label Color: Refer to ASME(ANSI) Standard A13.1-2007.	
			7	Valve Tag Installation: Install tags on valves and control devices in piping systems, except check valves; valves within factory-fabricated equipment units; shutoff valves; faucets; convenience and lawn-watering hose connections; and similar roughing-in connections of end-use fixtures and units. List tagged valves in a valve schedule. Valve-Tag Application Schedule: Tag valves according to size, shape, and color scheme. Valve Schedules: For each piping system, on 8-1/2-by-11-inch bond paper and laminated. Tabulate valve number, piping system, system abbreviation (as shown on valve tag), location of valve (room or space), normal-operating position (open, closed, or modulating), and variations for identification. Mark valves for emergency shutoff and similar special uses.	

Will Comply	Will Not Comply	N/A			Remarks for Not Complying
				DIVISION 22 - PLUMBING SYSTEM (cont.) **Section 22 05 76 - Facility Drainage Piping Cleanouts**	
			1	Provide cleanouts in all locations shown on the drawings and in all other locations required by The Local Building Code, and as directed by the Local Inspector.	
			2	Where special conditions exist, such as the need for a shallow cleanout to meet invert elevations, make changes necessary at no change in contract price and submit drawings or description for approval if requested by the Architect	
			3	Cleanouts shall be the same size as the pipes they serve up to 4 inch, and not less than 4 inch for piping of larger size.	
			4	Cleanouts shall be installed not more than 100 feet apart in horizontal drainage piping where two-way clean out fitting is utilized and 50 feet where one directional fitting is utilized.	
			5	Cleanouts shall be installed in the horizontal piping at each change of direction of the building waste, soil and storm systems greater than 45 degrees.	
			6	A cleanout shall be installed at or near the base of each waste, soil or rain leader stack.	
			7	Clean outs installed within cabinets shall be coordinated with cabinet contractor for access requirements to clean out.	
			8	Wall clean outs located adjacent to water closets shall be located centered between edge of water closet and wall. Center of wall clean out shall be located 1" above rim of water closet for access.	
			9	Cleanouts shall not be installed in main entry walks, doorways or highly visible public areas. Clean outs shall located out of general view where possible.	
				Section 22 05 77 - Facility Plumbing Drains and Accessories	
			1	Provide protection for all drains and cleanouts against damage during construction. The Plumbing Contractor shall be responsible to replace any damaged drains.	
			2	Unless otherwise specified, drains to be complete with strainers, trim, flashing and appurtenances and constructed of cast iron with painted finish.	
			3	Set all floor drains level and at proper elevations to surrounding floor area to provide smooth and uniform drainage area	
			4	Roof drains shall conform to ASME A112.6.4 or ASME A112.3.1.	
			5	Design of roof plans shall be noted with the total roof square footage of roof drain area including one-half the area of any vertical wall that diverts rainwater to the roof. The conversion of total square feet to gpm shall be provided adjacent to square foot total of roof drain area.	
			6	Provide drains in all locations shown on the Architectural and Plumbing drawings. Drains to be of the types specified and sized as shown on the plumbing drawings. Refer to the Architectural drawings for additional installation details.	
			7	Actual sizes and quantities of all drains shall be determined from the drawings.	

Will Comply	Will Not Comply	N/A			Remarks for Not Complying
				DIVISION 22 - PLUMBING SYSTEM (cont.) **Section 22 05 77 - Facility Plumbing Drains and Accessories**	
			8	Trap Primers shall not be used. Drains shall be installed with Trap Guards conforming to ASSE 1072.	
				Section 22 07 00 - Plumbing Insulation	
			1	All products within the conditioned air stream or active plenums shall comply with the NFPA 90A Flame/Smoke rating of 25/50 and comply with UL 181 erosion limitations. Fire hazard ratings shall be as determined by NFPA 255, "Method of Test of Surface Burning Characteristics of Building Materials" ASTM E84 or UL 723.	
			2	All adhesives, cements, finishes, jackets, etc., shall be UL listed or labeled for use as applied to insulation and designed specifically for use in the installation.	
			3	All insulation shall be installed in accordance with National Commercial & Industrial Insulation Standards (NCIA).	
			4	Piping shall insulated in accordance with Table C403.2.10	

Fluid Operating Temperature Range and Usage	Nominal Pipe or Tube Size (inches)		
	<1	1 to < 1-1/2	1-1/2 to < 4
105 - 140	1	1	1-1/2

Refer to Table C403.2.10 for higher operating temperature ranges.

			5	Rigid Fiberglass shall be a resin bonded fibrous glass, flame retardant, factory applied all service jacket vapor barrier with self sealing pressure sensitive lap joints, molded to accommodate pipe, maximum vapor permeance of .02 perm/in. and a puncture resistance of 50 units, minimum density 4.0 lb/cf, maximum conductivity per 1" thickness of .23 at 75°F, .29 at 200°F and .43 at 400°F mean temperature. Basis of design Knauf Pipe Insulation or approved substitution.	
			6	Closed Cell Elastomeric (Small Pipe Sizes up to 5 Inches) shall be flexible, elastomeric, closed cellular, tubular molded to accommodate piping, smooth outer surface suitable for painting with vinyl lacquer type coating, water resistant, non-absorbent, ozone resistant, minimum density of 4 lb/cf, maximum conductivity per 1" thickness of .27 at 75°F mean temperature. Basis of design Armacell LLC AP Armaflex and Self seal Armaflex 2000 or approved substitution.	
			7	Closed Cell Elastomeric (Large Pipe Sizes, 6" and Larger) Shall be sheet type, flexible, elastomeric, closed cellular, smooth outer surface suitable for painting with vinyl lacquer type coating, water resistant, non-absorbent, ozone resistant, minimum density of 4 lb/cf, maximum conductivity per 1" thickness of 2.7 at 75°F mean temperature. Basis of design Armacell LLC Armaflex II or approved substitution.	
			8	Corner angles shall be minimum 28 gauge, 1 inch by 1 inch aluminum adhered to 2 inch by 2 inch heavy kraft paper.	
			9	Wire shall be soft annealed galvanized, or copper, 16 gauge, or nickel copper alloy.	
			10	Closed cell elastomeric insulated finish shall be a white water based flexible, acrylic latex enamel. WB Armaflex finish or approved substitution.	
			11	Elastomeric Insulation Adhesive: Air drying contact adhesive for securing sheets to flat or curved metal surfaces and joining seams and butt joints of elastomeric insulation. Suitable for temperatures to 180F, dried film not to exceed 25 for flame spread and 50 for smoke development when tested per ASTM E 84-84A method.	

Will Comply	Will Not Comply	N/A			Remarks for Not Complying
				DIVISION 22 - PLUMBING SYSTEM (cont.) **Section 22 07 00 - Plumbing Insulation**	
			12	Vapor Barrier Mastic shall be an air drying flexible water based mastic used for applying a vapor barrier joint with glass cloth at insulation joints. Suitable for temperatures to 180°F, wet and dried film not to exceed 25 for flame spread and 50 for smoke development when tested per ASTM E 84-84A method. Maximum Perm rating of 0.08. , Childers Products Company, Inc. CP-35 Chil Therm® WB, Foster Products Corp. Product Data 30-80 Foster Vapor Safe® Coating, Marathon Industries, Inc. 590 LO-PERM, Richard's Paint Manufacturing CO., Inc. VBM-4, Vimasco Corp. 749 Vapor-Blok, or approved substitution.	
			13	Elastomeric Insulations: Air drying flexible water based finish used for finishing flexible elastomeric insulation. Suitable for temperatures to 180°F, wet and dried film not to exceed 25 for flame spread and 50 for smoke development when tested per ASTM E 84-84A method. Armacell LLC WB Armaflex finish or approved substitution.	
			14	Insulate floor drains receiving cold condensate for a minimum distance of 20' 0" to the vertical stack.	
				Section 22 11 16 - Domestic Water Piping	
			1	Piping, 4" and smaller – Below grade, copper tube, Type "K", hard temper, ASTM B88. Wrought copper or bronze fittings, solder joint, pressure rated, ASTM B16.22-95; or cast bronze fittings, solder joint, pressure rated, ASME B16.18-R94. Contractor option: Piping 1-1/2" and larger can be schedule 80 CPVC pipe and fittings with solvent welds.	CPVC has been added for SCPS to review use and determine if the use of CPVC is acceptable.
			2	Piping, 8" and smaller – Above grade, copper tube, Type "L", hard temper, ASTM B88. Wrought copper or bronze fittings, solder joint, pressure rated, ASTM B16.22-95; or cast bronze fittings, solder joint, pressure rated, ASME B16.18-R94. Contractor option: Piping 1-1/2" and smaller within the building can be schedule 40 CPVC with solvent welds. Pipe drops to fixtures and equipment connections shall transition to copper above ceiling prior to penetrating wall.	CPVC has been added for SCPS to review use and determine if the use of CPVC is acceptable.
			3	Temperature and pressure relief lines and drain pan lines same as domestic water, Type "L" hard-drawn copper in a return air plenum.	
			4	Pipe Fittings, 8" and smaller - Above ground installation: Wrought Copper, ANSI B16.22.	
			5	Pipe Fittings, 4" and smaller - Below ground installation: Wrought Copper, ANSI B16.22.	
			6	Solder for factory fabricated fittings: Lead-free per FPC	
			7	Bolts for ductile iron mechanical joints shall be square-headed, carbon steel, ASTM A 307, Grade B. Nuts shall be heavy-duty hex type full nuts; ASTM A 194, Grade 2.	
			8	PVC and PEX piping are not acceptable for domestic water systems.	
			9	Press Fitting Systems - (ProPress or approved substitution) press fittings are allowed in domestic water piping, grooved fittings are <u>not</u> acceptable.)	

Will Comply	Will Not Comply	N/A			Remarks for Not Complying
				DIVISION 22 - PLUMBING SYSTEM (cont.) **Section 22 11 16 - Domestic Water Piping**	
			10	An ASSE 1017 listed mixing valve shall be provided at the water heater location to distribute 120 degrees water to all fixture locations. Each fixture location shall be provided with an ASSE 1070 listed mixing valves to supply tempered water fixtures. Where hot water is circulated through a mixing valve a mixing valve with a hot water return bypass shall be specified.	
			11	Per the Florida Energy Code C404.5.1 the maximum allowable distance from a lavatory "public use faucet" to the nearest source of heated water shall not be more than two feet in length. Tempered water piping shall be routed to within two feet of public lavatory faucet and circulated back to water through hot water return system. • Lavatories in restroom determined to be public use include restrooms in lobby and group restrooms. • Lavatories in restroom determined not to be public are restroom designated for a specific group including staff restrooms, single restrooms in classrooms, locker rooms and restroom without direct access to the public. • Lavatories in restrooms not indicated above shall be confirmed with SCPS for direction.	
				Section 22 11 17 - Disinfection of Domestic Water Lines	
			1	Provide personnel, equipment and supplies, disinfect domestic hot and cold water systems, and flush out systems at completion of treatment.	
			2	Product Delivery, Storage and Handling: Protect against damage and contamination. Maintain caution labels on hazardous materials. Maintain storage room dry and with temperatures as uniform as possible between 60F and 80F. Do not store Caustic Soda directly on floor colder than 55F.	
			3	Protection: Provide necessary signs, barricades, and notices to prevent any person from accidentally consuming water or disturbing system being treated.	
			4	Prior to starting work verify that domestic water system is completed and cleaned. Notify Contractor about defects requiring correction. Do not start work until conditions are satisfactory.	
			5	Preparation of Water for Treatment shall be as follows: Verify pH factor of water to be treated. If pH factor is less than 7.2, introduce sufficient Alkali during Disinfectant injection. If pH factor is greater than 7.6, introduce sufficient Acid during Disinfectant injection.	
			6	System Treatment shall be as follows: Injection Disinfectant throughout system to obtain 50 to 80 ppm residual. Starting at outlet closest to water source, bleed water from each outlet until water produces odor of Disinfectant. Repeat process at each outlet throughout system. If odorless Disinfectant is used testing is required to determine if Disinfectant is fully dispersed throughout system. Maintain Disinfectant in system for 24 hours. If Disinfectant Residual is less than 25 ppm, repeat system treatment.	
			7	Test for Disinfectant Residual at each of the following locations: Ends of piping runs, Remote outlets and at least 15% of outlets on each floor where directed by Architect, but in no case less than 2 outlets.	
			8	Remove Disinfectant from system; permit no more than residual rate of incoming water or 1.0 ppm, whichever is greater.	
			9	Instruct Bacteriological Laboratory to take water samples no sooner than 24 hours after flushing system.	

Will Comply	Will Not Comply	N/A			Remarks for Not Complying
				DIVISION 22 - PLUMBING SYSTEM (cont.) **Section 22 11 17 - Disinfection of Domestic Water Lines**	
			10	Water sample locations shall be where here water enters system, at the ends of piping runs, at remote outlets and at least 10% of outlets on each floor other than those used for testing Disinfectant Residual, where directed by Architect, but in no case less than two (2) outlets.	
			11	Water samples shall be analyzed in accordance with AWWA Standard Methods for the Examination of Water & Waste Water, Latest Edition.	
				Section 22 11 23 - Domestic Water Pumps	
			1	Inline Circulator Pumps - Potable Water Service: Type: wet rotor, single stage, suitable for horizontal operation, quiet operation. Pump body shall be lead free bronze or stainless steel. Motor shall be non-overloading at any point on the pump curve. Range: 40F to 230F. Powered by 115 volt, 60 cycle single phase electrical supply.	
			2	Maximum velocity of the pump shall be Basis of design the temperature of water and size of piping serving the system.	
			3	Pump selections shall be no more than 5% less than the scheduled pump efficiency.	
			4	Maximum impeller diameter shall not exceed 85% of the cutwater diameter.	
			5	Support pipe as close to pump as valve assemblies will allow. Provide adequate access and service area.	
				Section 22 13 16 - Sanitary Drain, Waste, and Vent Piping	
			1	Underground sanitary piping: Service weight hub and spigot pipe and fittings, Fed. Spec. WW-P-401F, ASTM-A74-98, CISPI-301. Charlotte Seal Gaskets, ASTM C-564-97, CISPI-HSN. Warco-Quik-Tite Gaskets, ASTM C-564-94, CISPI-HSN. All underground piping in kitchen receiving discharge of waste higher than 140 degrees shall be cast iron. Piping shall remain cast iron to 40 feet downstream of last piece of equipment discharging waste higher than 140 degrees. Engineer shall indicate on the drawings where the use of cast iron pipe starts and where the transition to PVC pipe is acceptable. Based on the equipment used in the kitchen the use of cast iron 40 feet downstream of the last piece of equipment discharging above 140 degrees into the waste system can be reduce with approval of SCPS. Request must be submitted with high temperature equipment discharging into the system and indicating the point where transition to PVC is code compliant with FPC 702.5. Schedule 40, PVC-DWV drainage pattern, conforming to the following standards: · ASTM D-1784 – Rigid PVC Vinyl Components. · ASTM D-1785 – PVC Plastic Pipe, Schedule 40. · ASTM D-2665 – PVC Drain, Waste and Vent Pipe and Fittings. · ASTM D-2564 – Solvent Cements for PVC Pipe and Fittings. · NSF Standard 14 – Plastic Piping Components and Related Materials. PVC Foam core DWV pipe, ASTM F891, is not acceptable and shall not be approved under any circumstances nor installed on this project.	

Will Comply	Will Not Comply	N/A			Remarks for Not Complying
				DIVISION 22 - PLUMBING SYSTEM (cont.) **Section 22 13 16 - Sanitary Drain, Waste, and Vent Piping**	
			2	Above-ground sanitary and vent piping: No-hub cast iron pipe and fittings, CISPI Standard 301, ASTM A-888-98el. Service weight hub and spigot pipe and fittings, Fed. Spec. WW-P-401F, ASTM-A74-98, CISPI-301. No-hub couplings, CISPI Standard 310. Charlotte Seal Gaskets, ASTM C-564, CISPI-HSN. Warco-Quik-Tite Gaskets, ASTM C-564-97, CISPI-HSN. Cast iron piping shall provide with 4-band stainless steel fittings. 2" and smaller Type DWV hard-drawn copper tubing, ASTM B-306 with copper drainage pattern and (lead-free) solder 95-5 Tin-antimony. Pipe and fittings located in a plenum space shall be cast iron. Schedule 40, PVC-DWV drainage pattern, conforming to the following standards: · ASTM D-1784 – Rigid PVC Vinyl Components. · ASTM D-1785 – PVC Plastic Pipe, Schedule 40. · ASTM D-2665 – PVC Drain, Waste and Vent Pipe and Fittings. · ASTM D-2564 – Solvent Cements for PVC Pipe and Fittings. · NSF Standard 14 – Plastic Piping Components and Related Materials. PVC Foam core DWV pipe, ASTM F891, is not acceptable and shall not be approved under any circumstances nor installed on this project	
			3	½" to 1": Same as domestic water, Type "L" hard-drawn, or Schedule 40 PVC pipe and solvent joint fittings.	
			4	1-1/4" to 2" copper drainage tube, DWV Kitchen (Kitchen sinks and equipment waste).	
			5	Elevator sump pump discharge pipe, inside pit shall be Schedule 40 galvanized steel A53/A106 with black, cast iron drainage fittings with threaded joints. Discharge piping beyond elevator pit wall, below slab, to be similar to sanitary waste, Schedule 40 PVC-DWV.	
			6	PVC piping shall not be installed above slab in rooms with sound sensitive programs or use; Principal Office, Principal Conference Room, CCTV, ESE rooms identified by SCPS for the project.	
			7	PVC piping shall not be routed in a plenum return. Cast iron piping shall be provided.	
			8	Vent terminals shall not be located within 10'-0 air intake openings of building or HVAC equipment.	

Will Comply	Will Not Comply	N/A			Remarks for Not Complying
				DIVISION 22 - PLUMBING SYSTEM (cont.) **Section 22 14 13 - Facility Storm Drainage Piping**	
			1	Underground piping: No-hub cast iron pipe and fittings, CISPI Standard 301, ASTM A-888-98el. Service weight hub and spigot pipe and fittings, Fed. Spec. WW-P-401F, ASTM-A74-98, CISPI-301. No-hub couplings, CISPE Standard 310-97. Charlotte Seal Gaskets, ASTM C-564-97, CISPI-HSN. Warco-Quik-Tite Gaskets, ASTM C-564-94, CISPI-HSN. Schedule 40, PVC-DWV drainage pattern, conforming to the following standards: · ASTM D-1784 – Rigid PVC Vinyl Components. · ASTM D-1785 – PVC Plastic Pipe, Schedule 40. · ASTM D-2665 – PVC Drain, Waste and Vent Pipe and Fittings. · ASTM D-2564 – Solvent Cements for PVC Pipe and Fittings. · NSF Standard 14 – Plastic Piping Components and Related Materials. Pipe Size 15" – PVC pipe and fittings, ASTM D-3034 or ASTM F-679, SDR 35 gasket. Pipe Size 18", 21", 24" and 27" – PVC pipe and fittings, ASTM F-679, SDR 35 gasket.	
			2	Above-ground piping: No-hub cast iron pipe and fittings, CISPI Standard 301, ASTM A-888-98el. Service weight hub and spigot pipe and fittings, Fed. Spec. WW-P-401F, ASTM-A74-98, CISPI-301. No-hub couplings, CISPI Standard 310. Charlotte Seal Gaskets, ASTM C-564, CISPI-HSN. Warco-Quik-Tite Gaskets, ASTM C-564-97, CISPI-HSN. 2" and smaller Type DWV hard-drawn copper tubing, ASTM B-306 with copper drainage pattern and (lead-free) solder 95-5 Tin-antimony. Schedule 40, PVC-DWV drainage pattern, conforming to the following standards: · ASTM D-1784 – Rigid PVC Vinyl Components. · ASTM D-1785 – PVC Plastic Pipe, Schedule 40. · ASTM D-2665 – PVC Drain, Waste and Vent Pipe and Fittings. · ASTM D-2564 – Solvent Cements for PVC Pipe and Fittings. · NSF Standard 14 – Plastic Piping Components and Related Materials.	
			3	PVC piping shall not be installed in a return plenum.	
			4	PVC Foam core DWV pipe, ASTM F891, is not and shall not be approved under any circumstances nor installed on this project.	
				Section 22 16 00 - Gas Piping	
			1	Piping: Schedule 40 carbon steel, seamless; ASTM A 53, Grade A or B. Fittings: 2" and smaller: 150 lb. rated malleable iron, threaded, type, ASTM A 197. Fittings: Pipe fittings 2 1/2" and larger: Schedule 40 carbon steel, butt weld type, ASTM A 234 WPB	

Will Comply	Will Not Comply	N/A			Remarks for Not Complying
				DIVISION 22 - PLUMBING SYSTEM (cont.) **Section 22 16 00 - Gas Piping**	
			2	Piping: Copper type L. Pipe conforming to ASME B16.18 and B16.22.	
			3	Direct buried pipe shall be coated with an extrusion applied, fusion bonded epoxy-coated jacket, 0.040" minimum thickness.	
			4	Piping: Corrugated Stainless Steel Tubing (CSST) underground CSST tubing shall be 300 series Stainless Steel Strip conforming to ASTM A240 rated for 25 psi and have an elevated pressure rating of 125G. CSST shall have integral polyethylene sleeve with venting capabilities. Basis of design TracPipe PSII.	
			5	Piping: Corrugated Stainless Steel Tubing (CSST) Above ground CSST tubing shall be 300 series Stainless Steel Strip conforming to ASTM A240 rated for 25 psi and have an elevated pressure rating of 125G. CSST shall have an extruded fire-retarded engineered polymer jacket. Conductive jacket shall conform to ASTM E-84 (UL723) flame spread rating not to exceed 25 and ASTM-E84 (UL723) smoke density rating shall not exceed 50. Conductive jacket shall be resistant to UV. Basis of design TracPipe CounterStrike.	
			6	Piping: Polyethylene (PE) gas pipe: ASTM D3350, ASTM D2513. Fittings: Polyethylene pipe shall be joined by socket fusion, butt fusion, saddle fusion, mechanical fitting or electrofusion. Riser: Provide gas riser transition typical to Elster seal riser with steel pipe casing.	
			7	Gas piping routed below slabs shall be routed within conduits and vented in accordance with FBC (Fuel Gas) 404.14 and associated sections.	
			8	In accordance with 453.7.6 Automatic shut off the fire alarm system shall shut off gas and fuel oil supplies which serve student occupied spaces or pass through such spaces. The shutoff valve shall be located on the exterior at the service entrance to the building. The shutoff valve shall be of the manual reset type. In accordance with 453.7.6.1 Kitchen gas supplies the Kitchen gas supplies shall be shut off by activation of the kitchen hood fire suppression system. The shutoff valve shall be installed in accordance with the manufacturer's instructions and recommendations.	
			9	Engineer shall coordinate with architect and civil engineer to provide fence with gate to prevent student access to gas manifolds.	
			10	Flanges in gas piping runs shall be 150 lb rated forged carbon steel, weld-neck type, with raised face, bored to match the mating pipe I.D.; ASTM A 181 Grade 2, or ASTM A 105, Grade 2. Flanges shall have the manufacturer's trademark affixed in accordance with MSS SP-25.	
			11	Flanges for connection to flat-faced flanges, or to flat equipment surfaces, shall be flat-faced cast iron, 125 lb rated, ANSI B16.5. Flanges shall have the manufacturer's trademark affixed in accordance with MSS SP-25.	
			12	Bolting studs for raised-face flanges shall be ASTM A 193, Grade B7. Nuts shall be heavy duty hex type; ASTM A 194, Grade 2H.	
			13	Bolts for flat-faced flanges shall be square-headed, carbon steel, ASTM A 307, Grade B. Nuts shall be heavy-duty hex type full nuts; ASTM A 194, Grade 2.	
			14	Gaskets for raised-face flange joints: Full faced style, 1/8" thick. Gasket material shall be Nitrile (NBR) sheet, ASTM F104 Line Call Out F712100A9B4E22K5M6; Basis of design Garlock Blue-Gard® Style 3300 or approved substitution.	

Will Comply	Will Not Comply	N/A			Remarks for Not Complying
				DIVISION 22 - PLUMBING SYSTEM (cont.) **Section 22 16 00 - Gas Piping**	
			15	Gaskets for flat-faced flange joints: Full faced style, 1/8" thick. Gasket material shall be Nitrile (NBR) sheet, ASTM F104, Line Call Out F712100A9B4E22K5M6; Basis of design Garlock Blue-Gard® Style 3300 or approved substitution.	
			16	Vent cap to be a mushroom type to match piping and fittings or goose neck and shall be complete with insect screen.	
			17	Lubricated Plug Cock: 1/2" thru 2": Carbon steel body, threaded connection, cast iron lever, stainless steel plug, PTFE gasket and packing, stainless steel thrust rings, Class 150. Basis of design Dezurik Fig. 570, Resun 1524 and Resun1500. 2-1/2" and up: Carbon steel body, flanged connection, cast iron lever, stainless steel plug, PTFE gasket and packing, stainless steel, thrust rings, Class 150. Basis of design Dezurik Fig. 570, Resun R1525 and R1545.	
				Section 22 33 00 - Water Heaters and Accessories	
			1	Electric Tank Water Heater: Tank: Fully insulated, baked enamel steel jacket, insulation in conformance with ASHRAE 90A-1982 Standard for Electric Domestic Water Heater, glass lining, relief valve tap, rated for 150 psi. Element: Plated Copper, low watt density, replaceable, immersion type. Anode Rod: Selected for local water conditions, replaceable. Relief Valve: Provide relief valve sizes for unit and pipe. Controls: Factory packaged, factory wired with adjustable automatic temperature control to maintain desired water temperature and over temperature protector to cut unit off if automatic temperature control fails. Thermostat control for a water heater shall not serve as the temperature limiting means for hot or tempered water delivery temperatures at fixtures per FPC 607.1.1.	
			2	Thermostatic Control, Instantaneous Electric Water Heaters: Comply with UL 499 for tankless electric (water heater) heating appliance. Construction: Copper piping or tubing complying with NSF 61 barrier materials for potable water, without storage capacity. Connections: ASME B1.20.1 pipe thread. Pressure Rating: 150 psig. Heating Element: Resistance heating system. Temperature Control: Microprocessor. Safety Control: High-temperature-limit switch. Jacket: Aluminum or steel with enameled finish or plastic. A mixing valve, either integral or downstream of instantaneous water heater shall be provided to comply with FBC (Plumbing) 607.1.1.	

Will Comply	Will Not Comply	N/A			Remarks for Not Complying
				DIVISION 22 - PLUMBING SYSTEM (cont.) **Section 22 33 00 - Water Heaters and Accessories**	
			3	Gas Water Heater: Tank: Fully insulated, baked enamel steel jacket, insulation in conformance with ASHRAE 90.1 compliant for thermal efficiency, glass lined tank and heat exchanger coil, relief valve tap, rated for 150 psi. Relief Valve: Provide relief valve sizes for unit and pipe. Powered anode Rod or anodless model. Direct vent and intake with Schedule 40 PVC, CVPC or Polypropylene. Gas water heaters a minimum input capacity or 60,000 Btu are defined as boiler per FBC (SREF) 453.5.3. Per FBC (SREF) 453.7.8 Each boiler room shall be separated from the remainder of the building by one-hour fire-resistance-rated construction or shall be separate from other buildings by 60 feet (18 288 mm), and shall have an outswinging door opening directly to the exterior. A fire door swinging into the boiler room shall also be provided for any opening into the interior of the building. There shall be no opening into any corridor or area designed for use by students.	
			4	Condensing gas water heaters shall be provided with a neutralization kit for discharge of acidic waste prior to discharge to floor drain.	
			5	Thermal Expansion Tanks: Inline and floor models to be installed and supported according to FBC and all governing authorities. Support inline tanks utilizing a manufactured assembly or bracket fabricated for mounting expansion tank to prevent movement or damage. Larger expansion tanks shall be floor mounted with restraint to wall to prevent movement. No shut-off valves shall be located between expansion tank and connection to water heater.	
			6	Acceptable electric tank less water heater manufacturers are Chronomite and Eemax.	
			7	Acceptable electric tank water heater manufacturers are A.O. Smith, Lochinvar, Rheem and State.	
			8	Circulator Pumps: Refer to Specification Section 22 11 23 for additional requirements.	
			9	Do not allow the heater to be started without a full tank of water.	
			10	Install ball valve on the suction and discharge pipe of the circulator pump.	
			11	Water heaters shall be set at 140° F and routed through an ASSE 1017 listed mixing valve to be distributed at 120 degrees to all fixture locations. Each fixture location shall be provided with an ASSE 1070 listed mixing valves to supply tempered water fixtures. Where hot water is circulated through a mixing valve a mixing valve with a hot water return bypass shall be specified.	
			12	Label each water heater with a unique identifier.	

Will Comply	Will Not Comply	N/A			Remarks for Not Complying
				DIVISION 22 - PLUMBING SYSTEM (cont.) **Section 22 33 00 - Water Heaters and Accessories**	
			13	Provide equipment pads, stands and shelves as scheduled for each water heater.	
				Section 22 42 00- Plumbing Fixtures and Trim	
			1	Refer to the plumbing drawings for acceptable manufacturers and models. No substitutions are acceptable	
			2	All plumbing fixtures and trim shall be new as manufactured by firms regularly engaged in the manufacture of plumbing fixtures and trim of type, style and configuration required, whose products have been in satisfactory use and similar service.	
			3	Provide protection of all fixtures during construction from damage. Replace all damaged fixtures as directed by the Architect.	
			4	Each water supply connection to each fixture and each item of water consuming equipment shall be equipped with an accessible stop valve.	
			5	All wall hung fixtures shall be supported on floor mounted carriers designed and fitted to suit the fixture and building construction at each point of application.	
			6	All exposed bolt heads on water closets and urinals shall be covered with acorns or covers made from china, stainless steel, or chrome plated brass.	
			7	All plumbing fixtures and equipment shall be provided with all necessary stops, valves, traps, supplies and appurtenances required, except where specifically provided for by another contract.	
			8	All handicapped fixtures indicated and shown on the Plumbing and Architectural drawings shall comply with ANSI A117.1 1980.	
			9	Insulate hot and cold water supply pipes and waste pipe under all lavatories and ADA sinks not provided with an ADA panel all per FBC (Accessibility).	
			10	Caulk all gaps between walls/floors and plumbing fixtures.	
			11	Provide all rough-ins, components required to complete installation and final connections to all owner, architect or kitchen consultant fixtures and equipment.	
			12	All flush valves shall be quiet diaphragm type with integral screwdriver stops, vacuum breakers and have non hold open water saving feature. Secure all flush valves to wall with matching stanchions.	
			13	Access panels except for Master Control Valves shall have Allen Key locking latches.	
			14	Access panels or boxes for Master Control Valves shall have non-locking latches.	
			15	Master Control Valve Boxes and Panels shall not be located in fire rated walls. Exception: Wall has been coordinated with architect to be a width to allow a rating around valves and opening. Door of access box or panel shall not be rated as door closing spring will hinder quick access valves.	

Will Comply	Will Not Comply	N/A			Remarks for Not Complying
				DIVISION 22 - PLUMBING SYSTEM (cont.) **Section 22 42 00- Plumbing Fixtures and Trim**	
			16	Provide ASSE 1017 mixing valve at set at 120 degrees at water heater for distribution of hot water. Where hot water is circulated through a mixing valve a mixing valve with a hot water return bypass shall be specified.	
			17	Provide ASSE 1070 mixing valve set at 105 degrees to supply fixtures unless otherwise noted.	
			18	Provide 140 degree hot water system to kitchen with ASSE listed mixing valves to supply equipment and fixtures per code and manufacture's requirements.	
			19	Water Closets (Standard height and Children ADA ages 5 – 12) – Water conserving, White acid resisting, vitreous china, floor mounted, 14" to rim of fixture, 15" to top of seat, floor outlet, elongated bowl, 1 1/2" top spud, 1.28 gallon flushometer, siphon jet, white open front plastic seat and chrome plated diaphragm type flush valve. Coordinate flush valve supply height with grab bar. Basis of design Fixture: Zurn, American Standard and Kohler. Flush valve: Zurn and Sloan.	
			20	Water Closet – (ADA/Handicapped) Water conserving, White acid resisting vitreous china, floor mounted, 17" high, floor outlet, elongated bowl, 1 1/2" top spud, 1.28 gallon flushometer siphon jet, white open front plastic seat, and chrome plated diaphragm type flush valve with ADA compliant handle. Basis of design Fixture: Zurn, American Standard and Kohler. Flush valve: Zurn and Sloan.	
			21	Urinal (Standard height and ADA/Handicapped) – White acid resisting vitreous china, wall hung Basis of design Fixture: Zurn, American Standard and Kohler. Flush valve: Zurn and Sloan.	
			22	Lavatory (Standard height and ADA/Handicapped) - White acid resisting vitreous china, wall hung, 4" centers, cold and tempered water, vandal resistant push button self-closing metering faucet, .5 gpm aerator, vandal resistant, 1-1/4" grid drain with 1-1/4" OD tailpiece, chrome plated brass, 1-1/4" "P" trap, with CO plug, chrome plated brass loose-key angle stops with flexible risers and to floor fixture support. Basis of design Fixture: Zurn, American Standard and Kohler. Faucet: Zurn, T&S Brass and Chicago Faucet.	
			23	General sinks shall be ADA compliant, Type 304 stainless steel, 18 gauge, self rimming, sound deadened, 6-1/2" deep bowl, top surfaces fully polished, gooseneck faucet with wrist blade handle, .5 gpm aerator, cold and tempered water, cup strainer and chrome plated cast brass `P' trap with CO plug, chrome plated brass loose key angle stops and chrome plated riser. Basis of design Fixture: Elkay and Just Manufacturing. Faucet: Zurn, T&S Brass and Chicago Faucet.	
			24	Elementary classroom sinks - ADA compliant sink, type 304 18 gauge stainless steel, single bowl, 6-1/2" deep bowl, self rimming, sound deadened, single lever faucet, .5 gpm aerator, cold and tempered water, bubbler with flexible no lead guard. Provide single hole punch for bubbler on one side and two hole punches for faucet on opposite side, top surfaces fully polished, , cup strainer and chrome plated cast brass `p' trap with co plug, chrome plated brass loose key angle stops and chrome plated risers. Configuration of bubbler location to be left side or right side shall be coordinated with location of sink to allow for wheel chair side approach to access bubbler. Basis of design Fixture: Elkay and Just Manufacturing. Faucet: Zurn, T&S Brass and Chicago Faucet.	
			25	Art sink ADA compliant sink - type 304 18 gauge stainless steel, single bowl, 6-1/2" deep bowl, self rimming, sound deadened, top surfaces fully polished, off-center drain to allow for plaster trap, gooseneck faucet with wrist blade handle, cold and tempered water, cup strainer and chrome plated brass p-trap with co plug and chrome plated brass loose-key angle stops and chrome plated risers. provide faucet with 0.5 gpm aerator. Basis of design Fixture: Elkay and Just Manufacturing. Faucet: Zurn, T&S Brass and Chicago Faucet.	

Will Comply	Will Not Comply	N/A			Remarks for Not Complying
				DIVISION 22 - PLUMBING SYSTEM (cont.) **Section 22 42 00- Plumbing Fixtures and Trim**	
			26	Art sink non-ADA compliant sink - type 304 18 gauge stainless steel, single bowl, 8" deep bowl, self rimming, sound deadened, top surfaces fully polished, off-center drain to allow for plaster trap, gooseneck faucet with wrist blade handle, cold and tempered water, cup strainer and chrome plated brass p-trap with co plug and chrome plated brass loose-key angle stops and chrome plated risers. Provide plaster trap. Basis of design Fixture: Elkay and Just Manufacturing. Faucet: Zurn, T&S Brass and Chicago Faucet.	
			26	Plaster trap for Art sinks. In lieu of fixture p-trap provide polyethelene solids interceptor with 1-1/2" ip joint elbow inlet and 1-1/2" threaded side outlet, perforated stainless steel basket removable from top, with flanged and gasketed slotted cleanout cover. Basis of design Striem HLT-1176-1	
			27	Chemistry Classroom sinks - epoxy counter tops and integral sinks, lab faucets, and gas turrets. Engineer shall confirm if architect is specifying lab faucets and gas turrets. Engineer shall provide specification for bottle trap. Cold and tempered water shall be provided unless otherwise directed by SCPS. Bottle trap shall be constructed of a corrosion resistant polyolefin conforming to ASTM F1412-92. The trap is complete with a 1-1/2 loose nut inlet, an adjustable tail piece, transparent base, and 1-1/2 mechanical outlet. Basis of design Orion and Spears.	
			28	Science/Biology Classrooms sinks - Type 304 stainless steel, 18 gauge, self rimming, sound deadened, 6-1/2" deep bowl, top surfaces fully polished, gooseneck faucet or lab faucet with vacuum breaker with wrist blade handle, .5 gpm aerator, cold and tempered water, cup strainer and chrome plated cast brass `P' trap with CO plug, chrome plated brass loose key angle stops and chrome plated riser. Engineer shall verify requirement of lab faucet with vacuum breaker at sink or goose nick faucet with SCPS. Basis of design Fixture: Elkay and Just Manufacturing. Faucet: Zurn, T&S Brass and Chicago Faucet.	
			29	Mop Sink White molded stone, floor mounted, 24" x 24" x 10" faucet with bucket hook with rod support to wall, vacuum breaker and integral check stops to prevent cross connection. Factory installed drain, mop bracket, hose and rack. Basis of design Fixture: Zurn and Fiat. Faucet: Zurn, T&S Brass and Chicago Faucet.	
			30	Shower non-ADA compliant - Provide and install pressure balancing shower fitting and fixed shower head, integral service stops, 2" drain. Set shower valve limit stop to 105 degrees. Basis of design Fixture: Bradley, Symmons and Powers. Drains: Zurn, Watts and Josam.	
			31	Shower ADA compliant - Provide and install pressure balancing shower fitting, fixed and hand held shower and wall bracket, integral service stops, 30" slide bar, 60" flexible metal hose, 2" drain. Set shower valve limit stop to 105 degrees. Basis of design Fixture: Bradley, Symmons and Powers. Drains: Zurn, Watts and Josam.	
			32	Electric Water Cooler – (ADA/Handicapped) – Two-Level, wall hung heavy gauge steel vandal-resistant cabinet. Chrome plated brass vandal resistant bubbler is heavy duty, one piece construction satin finish stainless steel keyed into position to prevent rotation. Heavy duty push button control is vandal-resistant. In-line flow regulator, lead free water system pre-cooler and temperature controller and wall box. Unit capacity 8 GPH, 90°F ambient temperature, 80°F inlet water, 50°F outlet water. UL rated for indoor or outdoor use. Basis of design Elkay VRCTL8SC.	

Will Comply	Will Not Comply	N/A			Remarks for Not Complying
				DIVISION 22 - PLUMBING SYSTEM (cont.) **Section 22 42 00- Plumbing Fixtures and Trim**	
			33	Electric Water Cooler with bottle filler – (ADA/Handicapped) – Two-Level, wall hung heavy gauge steel vandal-resistant cabinet. Chrome plated brass vandal resistant bubbler is heavy duty, one piece construction satin finish stainless steel keyed into position to prevent rotation. Heavy duty push button control is vandal-resistant. Bottle filler on low side. In-line flow regulator, lead free water system pre-cooler and temperature controller and wall box. Unit capacity 8 GPH, 90°F ambient temperature, 80°F inlet water, 50°F outlet water. UL rated for indoor or outdoor use. Elementary Schools – Dining and Covered Play Middle School – Dining and Locker Rooms High School – Cafeteria and Locker Rooms Basis of design Elkay VRCTL8WS.	
			34	Drinking Fountain – (ADA/Handicapped) – Two Level, wall hung heavy gauge steel vandal-resistant cabinet. Chrome plated vandal resistant bubbler is heavy duty, one piece construction satin finish stainless steel keyed into position to prevent rotation. Heavy duty push button control is vandal-resistant. In-line flow regulator, rated for indoor or outdoor use, lead free water system. Provide vandal-resistant mounting. Basis of design Elkay VRCDS.	
			35	Hose Bibb - Mechanical rooms/CEP (non-student areas). Moderate Climate, 3/4" male hose thread, no lead solder, standard "O" size seat washer, vacuum breaker, loose tee key. Hose bibb located in outside in CEP or Chiller Yard shall be insulated and provided with trim guard for protection. Basis of design Zurn, Woodford and Watts.	
			36	Hose Bibb - Group Restrooms. Moderate Climate, 3/4" male hose thread, no lead solder, standard "O" size seat washer, vacuum breaker, loose tee key. Provide stem lock. Basis of design Zurn, Woodford and Watts.	
			37	Wall hydrant - Freezeless, automatic draining, anti-siphon vacuum breaker, cast brass with chrome finish, loose tee key. Provide round box with rectangle cover on tilt wall construction. Basis of design Zurn, Woodford and Watts.	
			38	Grease Interceptor - Grease interceptor shall be manufactured in accordance with florida administration code 64e-6. Grease interceptors shall be water and gas tight. Grease interceptor shall be engineered to support loads h-20 truck wheels with 30% impact per aashto, traffic bearing frame and cover shall meet fdot standards. the minimum tank volume of grease interceptors shall be 750 gallons, and the maximum volume shall be 1,250 gallons. Grease Interceptor shall vented back to building or to a protected area and terminated with a goose neck vent with insect screen.	

Will Comply	Will Not Comply	N/A			Remarks for Not Complying
				DIVISION 23 - HVAC SYSTEMS **Section 23 00 00 - General HVAC**	
			1	Refer to the General Mechanical Design Criteria.	
				HVAC Demolition	
			1	The work of this section shall include furnishing all labor, materials and equipment for the demolition and removal of all existing fixtures, piping and equipment as indicated in the Contract Documents.	
			2	Provide protection of all fixtures, ductwork, equipment and appurtenances to remain from damage during demolition.	
			3	Remove piping, fixtures, ductwork, appurtenances and equipment where indicated on the drawings or where removal is required for completion of new work under this contract.	
			4	Take all necessary precautions to protect existing structure, its contents and areas of the site not within demolition limits. Take any measures necessary to protect personnel from hazards.	
			5	Where existing materials or assemblies are to be removed, modified, relocated or incorporated in the work take care to prevent damage. Provide temporary protection where new or existing openings exist in roof or walls as required to secure building and to keep weather tight.	
			6	Where finishes are indicated to be patched and repaired, do demolition work required with care, to prevent damage to surrounding areas and to facilitate the patching and repairing work.	
			7	During the progress of the work, efforts shall be made to keep dust to a minimum.	
			8	Remove all trash and debris from the project as the work progresses and dispose of as directed by the Project Manager.	
				Section 23 05 00 - Common Work Results for HVAC Systems	
			1	All work shall comply with applicable requirements set forth in the General Conditions and applicable codes as follows: · Florida Building Code 6th Edition (2017) Building . Florida Building Code 6th Edition (2017) Energy Conservation . Florida Building Code 6th Edition (2017) Mechanical . Florida Building Code 6th Edition (2017) Existing Building · Florida Building Code 6th Edition (2017) Accessibility · Florida Building Code 6th Edition (2017) Fuel Gas · Life Safety Code – NFPA 101, 2015 w/ Florida Amendments · Florida Fire Prevention Code 6th Edition (2017) . NFPA 101 Life Safety Code, 2015 Edition . National Electrical Code, 2014 Edition . NFPA 1 Fire Code, 2015 Edition · Local codes or standards incorporated by the authority having jurisdiction.	
				Section 23 05 10 -Basic Materials and Methods for HVAC System	
			1	Concrete for equipment bases and pads shall be 3000 p.s.i. design mix prepared in accord with ASTM C94. Cement shall be in accord with ASTM C150. Aggregate shall be fine sand in accord with ASTM C33. Water shall be clean, fresh, and drinkable.	
			2	Fabricated steel supports may be shop or field fabricated, and shall be in accordance with details on drawings.	

Will Comply	Will Not Comply	N/A			Remarks for Not Complying
				DIVISION 23 - HVAC SYSTEMS (cont.) **Section 23 05 10 -Basic Materials and Methods for HVAC System**	
			3	Steel members shall be saw cut, with corners ground smooth, and shall be assembled with welded or bolted connections at Contractor's option. Connections shall be in accord with specified AISC Publications.	
			4	Steel angles, channels, and plate shall be in accordance with ASTM A36.	
			5	Steel members, including fasteners, exposed to weather shall be galvanized.	
				Section 23 05 13 -Common Motor Requirements for HVAC System	
			1	Starters: Full Voltage, Single Speed, Magnetic shall be full voltage, non reversing magnetic as scheduled. 3 phase, 60 Hz, voltage as scheduled.	
			2	Starters: Reduced Voltage, Part Winding shall be reduced voltage, part winding, magnetic for 50 50 winding split. 3 phase, 60 Hz, voltage as scheduled.	
			3	Starters: Two Speed, One Winding shall be full voltage, non reversing, magnetic. 3 phase, 60 Hz, voltage as scheduled.	
			4	Manual Starters shall be bimetal type thermal overload protection in all phases of type to cause switch handle to assume mid position on overload.	
			5	3/4 HP and Larger Horsepower Motors shall be NEMA Premium™ efficiency type.	
			6	Fractional Horsepower Motors shall have a permanent split capacitor. 115 volt, 1 phase, 60 Hz. thermally protected. Other features of motors supplied as an integral part of a factory assembly shall be acceptable as the manufacturer's standard based on acceptance of the assembly as a whole.	
			7	Starters to be mounted where indicated on the drawings or within sight of the motor controlled.	
			8	Starters may be mounted directly to masonry, CMU or concrete walls using appropriate fastening methods. When the wall is an exterior wall or any wall where condensation may occur, provide appropriate stand-off, i.e., Unistrut channel).	
			9	Starters may be mounted directly to equipment such as factory or field built AHU. In this case, through bolts and backing plates along with an appropriate stand-off shall be used. Seal all holes. Self-tapping screws with exposed ends will not be acceptable.	
			10	When starters are required to be located in areas where walls are not available, provide a Unistrut type frame securely mounted to floor adequately braced to form a rigid mounting surface.	
			11	Starters shall be generally mounted with the center of the unit at 60" above the finished floor. Service clearance shall be provided in accordance with the National Electric Code. Starters shall be accessible.	
			12	Provide housekeeping pad for all floor mounted starters.	
			13	All motors shall have overload protection as required by NEC. Any motor without integral protection shall have a starter that provides overload protection furnished by Division 23.	

Will Comply	Will Not Comply	N/A			Remarks for Not Complying
				DIVISION 23 - HVAC SYSTEMS (cont.) **Section 23 05 13 -Common Motor Requirements for HVAC System**	
			14	Acceptable Motor Starter Manufacturer's are Allen Bradley, Cutler Hammer, General Electric, Siemens and Square D.	
			15	Provide shaft grounding rings on all motors.	
				Section 23 05 17 -Adjustable Frequency Drives	
			1	All adjustable frequency drives and bypass assemblies and control panel enclosures must be the product of a single manufacturer.	
			2	AFD shall be UL or ETL listed. Components used in all options shall be UL listed. The entire AFD and bypass assembly shall be U.L. marked with a short circuit current rating of at least 100,000 amperes.	
			3	The AFD shall be designed to meet the power line transient conditions defined within ANSI/IEEE C62.41-1991 and shall have a voltage withstand rating of 6 KV in accordance with UL 1449.	
			4	AFD shall be in certified for with FCC emission limits for Class A computing devices. If required to meet these limits, isolation transformers, and/or line filters shall be provided.	
			5	Ambient noise generated by the AFD shall be limited to an amount equal to 3 dBa greater than the fan or pump system noise level at design rpm. If acoustic enclosures are required to meet these limitations provide same with the AFD.	
			6	AFD manufacturer shall submit an analysis to certify that the drive, when installed in the electrical distribution system shown on the Contract Documents is in compliance with the requirements of IEEE 519 - 2014. The Point of Common Coupling (PCC) shall be defined as the secondary lugs of the Utility Company Transformer. The transformer impedance shall be 5.75% with the appropriate short circuit current based on this value.	
			7	AFD and option design and construction thereof shall comply with all applicable provisions of the latest National Electrical Code.	
			8	Power components shall undergo burn in to ensure product function. Circuit boards shall be tested under thermal cycling and the complete unit shall be tested under full load conditions to ensure maximum product reliability.	
			9	A Factory Authorized Service Engineer is to be provided for start up which shall include verification of proper installation and wiring. Inspect all components, circuit boards and control wiring. Ensure proper power source and control signal. Apply power and provide full operational testing and calibration. Also provide a minimum of 16 hours training for Owner's operators.	
			10	AFD's shall be fully protected during the duration of construction of the project. Units shall be covered to protect from all dirt, dust and debris. Contractor will be responsible for replacing any unit that has dirt, dust or debris infiltration into the unit.	
			11	The adjustable frequency drive shall convert either 208/230 or 460 volt ±10%, three phase, 60 HZ (± 2 HZ) utility power to adjustable voltage/frequency, three phase, AC power for stepless motor control from 5% to 105% of base speed.	
			12	The AFD shall be self contained, totally enclosed in a NEMA 1 ventilated cabinet and capable of operation between 0° and 40°C except where located outdoors enclosure to be NEMA 3R or 4X watertight and dust tight enclosure, depending on the manufacturers offering. The entire AFD assembly shall be mounted in a common enclosure requiring only a power in and a power out connection.	

Will Comply	Will Not Comply	N/A			Remarks for Not Complying
				DIVISION 23 - HVAC SYSTEMS (cont.) **Section 23 05 17 -Adjustable Frequency Drives**	
			14	The adjustable frequency drive (AFD) shall produce an adjustable AC voltage/frequency output for complete motor speed control using transistorized sine coded PWM technology, and an input power factor near unity over the entire speed range. The AFD shall not produce excessive or objectionable motor acoustical noise. The AFD shall not induce voltage line notching back to the utility line and total harmonic distortion (THD) shall not exceed the limits set in IEEE Std. 519 -2014 when installed in the electrical distribution system shown on the Contract Documents. The AFD shall be automatically controlled by a grounded electronic control signal.	
			13	Furnish adjustable frequency drive for each motor identified as requiring an adjustable frequency drive or variable speed operation.	
			14	Furnish all necessary wiring diagrams to electrical contractor for installation and power wiring.	
			15	AFD to be mounted where indicated on the drawings or within sight of the motor controlled.	
			16	When AFD is required to be located in areas where walls are not available, provide a Unistrut type frame securely mounted to floor adequately braced to form a rigid mounting surface.	
			17	Adjustable frequency drives shall be accessible and not located above the ceiling.	
			18	Provide housekeeping pad for all floor mounted adjustable frequency drives.	
			19	Acceptable AFD Manufacturer's are ABB, Danfoss and Trane.	
			20	Provide shaft grounding rings on all motors.	
			21	All AFD's with a bypass shall have a lockable bypass via a key.	
				Section 23 05 18 -Control Wiring	
			1	All control wiring shall be properly installed in an approved raceway system or when allowed, run exposed in concealed spaces. All control wiring run in exposed areas shall be in an approved raceway unless otherwise noted.	
			2	Exposed control wire shall be properly secured and/or supported within equipment encloses. Cable shall be secured on no greater than 18" centers.	
			3	Control wire run exposed shall be neatly bundled and routed parallel and/or perpendicular to building structure or equipment casing. Routing of wire shall be so that it does not interfere, chafe or obstruct service or maintenance of the equipment served.	
			4	All openings made for the passing of control wire shall be properly bushed to prevent chafing. Hole size shall be suitable for the quantity of wires or tubing passing through while allowing for ease of pulling and future expansion. Oversized holes beyond these requirements are not allowed.	
			5	Holes made within air handling equipment which may allow the transfer or bypassing of air shall be properly sealed after wire is pulled. Expanding foam sealant and proper backing material will be acceptable. Seal shall be suitable for maximum unit operating pressures.	

Will Comply	Will Not Comply	N/A			Remarks for Not Complying
				DIVISION 23 - HVAC SYSTEMS (cont.) **Section 23 05 18 -Control Wiring**	
			6	Attachments of control devices, raceway and cable supports shall be made with proper attachments. Self-drilling screws which result in exposed end will not be acceptable. Bolts and nuts shall be used with bolt head exposed to view. All fasteners located where exposed to weather or moisture shall be stainless steel or cadmium plated.	
			7	Any opening, holes or cuts in equipment enclosures or building structure not used shall be neatly sealed. On equipment, the seal or patch shall be of similar material sealed and painted to match.	
			8	The control contractor shall clean all unused or scrap material from the equipment enclosure.	
			9	All control wire shall be identified by proper cable identification methods. Verify how cables shall be labeled with the Owner's Representative prior to the start of work. All termination shall be labeled and labels clearly visible.	
			10	All control devices, cabinets, equipment and raceways shall be labeled. Verify how the hardware shall be labeled with the OAR prior to the start of work.	
			11	Splices in control wire are not allowed unless the length of run is too great to allow for a continuous run. When splices become necessary, they shall be solder connected with heat shrink tubing. When raceway is used, all splices shall be in junction boxes.	
			12	Control devices (i.e., flow switches), connected to cold equipment where the possibility of condensation may occur shall be vapor proof type. The connecting conduit shall be properly sealed with spray type foam after the wires are pulled through. If this is not possible, a weatherproof junction box shall be close mounted to the device to allow for proper moisture sealing. Conduit connections shall be sealed with a silicon type caulk/sealant.	
			13	All control devices or wiring located exposed to weather or moisture shall be in an approved raceway system. This system shall be properly supported and sealed to prohibit moisture convection or transfer. Provide flexible conduit similar to seal tight for connection to all equipment. EMT and set screw fittings are not acceptable. All exterior raceway shall be IMC (Intermediate Metallic Conduit) or better with threaded fittings.	
			14	Where a disconnect switch is mounted between an adjustable frequency drive and the motor, the disconnect must have a late make, early break auxiliary contact. This contact shall be wired into the AFD control circuit so that the control circuit is disconnected before the power circuit it broken.	
			15	The BAS Contractor shall fully review the electrical drawings for interlock wiring required for exterior and interior lighting control. BAS contractor to coordinate with the electrical contractor all relays, contactors, programming and wiring required.	
			16	The BAS Contractor shall fully coordinate with all other trades to ensure sufficient service access to HVAC control panels and devices.	

Will Comply	Will Not Comply	N/A			Remarks for Not Complying
				DIVISION 23 - HVAC SYSTEMS (cont.) **Section 23 05 19 -Meters and Gauges for HVAC Piping**	
			1	Strainers: "Y" Pattern - HVAC Water Service: Size 1/4" thru 2": Cast iron body, threaded connection, threaded blow-off cover, removable stainless steel screen .045" perforations, rated at 450 PSIG. Temperature and pressure test port extended to clear required insulation on each side of strainer. Size 2 1/2" and up: Cast iron body, flanged connection, flanged blow-off cover. Blow-off cover tapped for blow-off valve, removable stainless steel screen .045" perforations, rated at 125 PSIGG. If grooved mechanical system is in use a "T" type grooved end, ductile iron body, available with blow off, 304 SS removable screen, choice of mesh size. Temperature and pressure test port extended to clear required insulation on each side of strainer.	
			2	Basket Strainers: HVAC Water Service: Size 4" and up: Cast iron body, flanged connection, flanged cover, cover tapped for air vent, body tapped for drain valve, removable stainless steel basket .125" perforations rated at 150 PSIG.	
			3	Thermometers and Accessories: Industrial Reading Non-Mercury Type: Construction: Adjust angle, 9"scale with lagging extension brass well, of the blue dye (only) fill type and guaranteed accurate to + one scale division. Thermometer shall have glass front to exclude dirt and dust. Thermometers containing mercury are not acceptable, they shall be organically filled. Thermometers installed outdoors shall be specifically designed and weatherproofed for this application. Temperature range 30/300. Based on Trerice Type BX91403 or approved substitution. Bi Metal Dial Type: Construction: 5" dial, adjust angle, with lagging brass extension well. Stainless steel case bezel, fittings and stem. Head assembly sealed against dust, fumes and moisture with glass window. Accuracy of ± 1% of thermometer range and also be externally adjustable. Thermometer Well: Construction - Brass or ductile iron body, with lagging extension, length to accommodate thermometer stem length. Based on Weksler Type AF or approved substitution.	
			4	Pressure Gauges and Accessories: Pressure Gauges: Construction: 4 1/2" dial, high impact polypropylene case, 1/4" bottom connection, 1/2% accuracy in accordance with ANSI B40.1 1974 Grade A. Stainless steel rotary with stainless steel pinion gear; stainless steel sector gear stainless steel link. Stainless steel bourdon tube, 316 stainless steel socket and slotted adjustable pointer. Case of black high impact polypropylene suitable for surface or direct mounting and with bottom connection. For outdoor locations, provide glycerin filled gauges. Range: Ranges shall be so selected to indicate pressure reading in midpoint of scale selected. Manifold Valves (Trumpet Valve) (Water): - 2, 3 or 4 port - Brass body, spring return, push button brass valves, 1/4" compression connections. Gauge tap at top, calibrated gauge test port with gauge cock. 125 PSIG rated, 20F to 220F range. Piston type snubber: Brass body, threaded connections, suitable for mounting horizontal or vertical. (Required at pump inlet and discharge.) Based on Weksler Type RS 1 or approved substitution. Filter type snubber: Brass body, threaded connection, micro metallic stainless steel filter. (For all gauges except pump service).	

Will Comply	Will Not Comply	N/A			Remarks for Not Complying
				DIVISION 23 - HVAC SYSTEMS (cont.) **Section 23 05 19 -Meters and Gauges for HVAC Piping**	
			5	Pressure and Temperature Test Ports: Brass or stainless steel body with threaded cap and gasket, length to extend past insulation. Two self closing valves with intermediate pocket for added pressure protection. Sized for standard 1/8" probe.	
			6	Pressure and Temperature Test Kit: Pressure temperature test kits consisting of 0-100 PSIG pressure gauge with adapter, 25 125F testing thermometer, 0-220F testing thermometer, gauge adopted and protective carrying cast and master air vent assembly. Provide 2 kits to the Facilities Planning Department at the close-out of the project.	
			7	Pump Suction Diffusers: End Suction Diffuser shall be cast iron angle type body with inlet vanes and combination diffuser strainer orifice cylinder with 3/16" diameter openings for pump protection flanged connection. A permanent magnet shall be located within the flow stream and shall be removable for cleaning. The orifice cylinder shall be equipped with a disposable fine mesh strainer, which shall be removed after system start up. Orifice cylinder shall be designed to withstand pressure differential equal to pump shutoff head and shall have a free area equal to five times cross section area of pump suction opening. Vane length shall be no less than 2 1/2 times the pump connection diameter. Unit shall be provided with adjustable support foot to carry weight of suction piping. Body tapped for pressure gauge and strainer blow-down.	
			8	Pump Suction Diffusers: Double Suction Diffuser shall be angle type cast iron body with 125# ANSI flanged inlet and outlet connections, exit vane, cast bronze venturi rings and double inlet stainless steel orifice cylinder assembly arranged for service removal from either end of cylinder. A threaded blow-¬down connection shall be located to remove accumulated debris. Inlet and outlet connections shall be equipped with 1/4" gauge tapping's. Diffusers shall be equipped with start up strainer which shall be removed after initial operation. Orifice cylinders shall be selected to withstand a pressure differential equal to pump shut off head. Clean unit pressure drop at 10 fps pump suction velocity shall not exceed 2 PSIG.	
			9	Pump Suction Diffusers: Grooved End Suction Diffuser shall be of ductile iron conforming to ASTM A 536, with enamel coating. Diffuser shall be 304 SS with 3/16" diameter holes. Start up bronze 16 mesh screen shall be removed after system start up. Unit shall have two 1/4" plugged bosses for pressure taps. A 3/4" plug shall be provided on the base for draining. Unit shall be provided with 1 1/4" Schedule. 40 pipe support. Vane length shall be no less than 2 1/2 times the pump connection diameter.	
			10	Differential Pressure Type Flow Switch: Switch to have bellows suitable for 175 PSIG and suitable for use with water. Switch shall have an adjustable pressure difference (Hi-Low) and an adjustable differential (Cut out to cut in) with pulsation snubber and a NEMA-12 enclosure.	
			11	Provide a digital meter on all cooling tower blow down and cooling tower make-up water connections. These meters do not have to be tied to the Building Automation System.	
			12	Meters for chilled water supply and blow-down per SCPS direction on meter type.	

Will Comply	Will Not Comply	N/A			Remarks for Not Complying
				DIVISION 23 - HVAC SYSTEMS (cont.) **Section 23 05 23 -General-Duty Valves for HVAC System**	
			1	Automatic Flow Control Valves – HVAC Water Service: Size ½" thru 2-1/2" shall be brass wye body design, thread or sweat connection, ground joint union, dual temperature and pressure test ports extended to clear required insulation, range 20F to 230F rated at 400 psi water. Stainless steel or nickel plated piston brass orifice and spring, replaceable without removing from installation, factory set to control the flow rate within 5% of the tagged rating over an operating pressure differential of at least 10 times the minimum required for full flow condition. GPM and direction of flow shall be clearly marked on flow control valves. Wide open pressure drop shall not exceed 10 ft. Valves shall be calibrated for the fluid being pumped. Acceptable Manufacturers are Flow Design or Victaulic Only. Size 2-1/2" thru 12": Ductile iron body, wafer style connection, dual temperature and pressure test ports, range 20F to 230F rated at 150 psi. Stainless steel or nickel plated piston brass orifice and spring, factory set to control the flow rate within 5% of the tagged rating over an operating pressure differential of at least 10 times the minimum required for full flow condition. GPM and direction of flow shall be clearly marked on flow control valves. Wide open pressure drop shall not exceed 10 ft. Valves shall be calibrated for the fluid being pumped. Acceptable Manufacturers are Flow Design or Victaulic Only.	
			2	Ball Valves - HVAC water service: Size 1/4" thru 2" shall be two piece, adapter loaded, full port type with brass body, threaded or sweat connection, stainless steel stem, stainless steel ball, Teflon or silicone bronze seat, steel lever handle, indicator stop, 150 lb. 600 WOG.	
			3	Butterfly Valves - HVAC water service: HVAC water service – Above Ground Use - Size 2 1/2" thru 4" shall be 416 stainless steel stem, lug wafer body drilled and tapped for isolation and removal of downstream piping, cast iron or ductile iron body, long neck body extended to allow for a minimum of 2" insulation, aluminum bronze or stainless steel disc, bubble tight EPDM seat, infinite position, memory stop handle. Class 150, 20Fto 210F range. HVAC water service – Above Ground Use - Size 6" and up: As described above with totally enclosed weatherproof gear actuator with indicator and memory stop. . HVAC water service – Above Ground Use - Size 2 1/2" 12" grooved end shall be ductile iron body to ASTM A 536 with PPS coating and ductile iron disc to ASTM A 536. 2-1/2" - 4" to have infinitely variable memory stop handle. Valves 6" and above to have gear operator. Valve has bubble tight shut off up to 300 psi and 230°. Valve will have a bracket allowing up to 2" insulation. HVAC water service – Below Ground Use - Size 2 1/2" and above shall be 416 stainless steel stem, lug wafer body drilled and tapped for isolation and removal of downstream piping, cast iron or ductile iron body, long neck body extended to allow for a minimum of 2" insulation, aluminum bronze or stainless steel disc, bubble tight EPDM seat. Totally enclosed weatherproof, permanently lubricated gear actuator with operating not complying with ASWWA C504.	

Will Comply	Will Not Comply	N/A			Remarks for Not Complying
				DIVISION 23 - HVAC SYSTEMS (cont.) **Section 23 05 23 -General-Duty Valves for HVAC System**	
			4	Check Valves - HVAC Water Service - Horizontal Swing Horizontal swing check valve Size 1/4" thru 2" shall be bronze body threaded or sweat connection, "Y" pattern, bronze seat, renewable Teflon or bronze, swing disc, 125 lb. SWP-200 lb. WOG (non-shock). Horizontal swing check valve Size 2 1/2" and up. Iron body flanged connection, bolted cover, bronze seat, renewable bronze swing disc, brass hinge pin, 125 lb. SWP-200 lb. WOG (non-shock).	
			5	Check Valves - HVAC Water Service - Vertical Lift Vertical lift check valve - Size 3/8" thru 2" shall be bronze body, threaded or sweat connection, renewable Teflon disc and seat, copper or stainless steel spring loaded, stainless steel or silicone bronze stem, Class 125. Vertical lift check valve - Size 2 1/2" thru 10" shall be iron wafer type body, taped lug connection, renewable bronze disc and seat, stainless steel spring loaded, bronze guide pin, Class 125. Vertical lift check valve - Size 12" and up shall be iron globe body, flanged connection, renewable bronze disc and seat, stainless steel spring loaded, bronze guide pin, Class 125. Vertical lift check valve - Size 2 1/2" thru 12" (grooved end) – shall be ductile iron body, grooved end connection 316 SS disc, EPDM seat, with tilted disc for 2 1/2 3", and dual disc 4" thru 12". Valve may be installed horizontally or vertically for temperature ratings up to 230°.	
			6	Check Valves - HVAC Water Service - Swing Swing Check Valve: Size 1/2" thru 2". Bronze body thread or sweat connection, "Y" pattern, lead free, inline lift type, spring actuated, resilient discs. Temperature rating 300°.	
			7	Combination Automatic Flow Control and Shutoff Valves: HVAC Water Service: Shall be brass wye body thread or sweat connection, union, two temperature and pressure test port extended to clear require insulation, brass or bronze ball valve with stainless steel ball and stem, non-thermal conductive material type actuator extended to clear required insulation for chilled water applications, steel lever type for heating applications. Range 20F to 230F rating 400 psi water. Stainless steel or nickel plated piston brass orifice and spring, replaceable without removing from installation, factory set to control the flow rate within 5% of the tagged rating over an operating pressure differential of at least 10 times the minimum required for full flow condition. GPM and direction of flow shall be clearly marked on flow control valves. Wide open pressure drop shall not exceed 10 ft. Valves shall be calibrated for the fluid being pumped. Acceptable Manufacturers are Flow Design or Victaulic Only.	
			8	Combination Strainer and Shutoff Valves for HVAC Water Service: Size ½" thru 2" shall be brass body, thread or sweat connection, ground joint union, temperature and pressure test port extended to clear required insulation (on each side of the valve), ball valve with non-thermal conductive material type actuator extended to clear required insulation for chilled water applications, lever type for heating applications. Removable stainless strainer, 40 mesh for .25 gpm and up, 20 mesh for 1.25 gpm and up. Unit side drain and strainer blow-down valve. Rated at 400 PSIG. Acceptable Manufacturers are Flow Design or Victaulic Only.	

Will Comply	Will Not Comply	N/A			Remarks for Not Complying
				DIVISION 23 - HVAC SYSTEMS (cont.) **Section 23 05 23 -General-Duty Valves for HVAC System**	
			9	Drain valves - HVAC water service: Size 1/2" and 3/4" shall be two piece, adapter loaded, single reduced port type with brass body, iron pipe thread inlet or sweat inlet, 3/4" hose thread outlet, brass cap and chain at outlet, stainless steel stem, stainless steel ball, Teflon or silicone bronze seat, steel lever handle, indicator stop, 150 lb. 600 WOG.	
			10	Pressure Reducing Valves for HVAC water service - Size 1/2" and 3/4" shall be brass body, threaded connection, Teflon or bronze diaphragm, Teflon or bronze seat, brass stem, strainer, check valve, bolted steel bonnet, adjustable range 8 25 psi or 25 60 psi (see drawings), Class 125.	
			11	Pressure Relief Valve for HVAC water service - Size 3/4" and 1" shall be bronze body, Class 125, threaded connection, diaphragm assist spring loaded disc, ASME rated, permanently attached nameplate displaying BTUH and relief setting as certified by the National Board of Boiler and Pressure Vessel Inspectors. Opening pressure as indicated on drawings.	
			12	Relief Valve: Shall have ½" bronze body and spring case with stainless steel ball and cadmium plated steel spring.	
			13	Balancing cock for HVAC water service - Size 1/2" thru 2" shall be bronze or cast iron body threaded or sweat connection, brass valve, "O" ring sealed, calibrated nameplate, indicator pointer, dual stage orifice, read out ports equipped with integral composition check valve, 125 psi rated, 20F to 220F range. Acceptable Manufacturers are Flow Design or Victaulic Only.	
			14	Wheel Operators: Ductile iron sprocket rim equal to or larger than hand wheel, malleable iron guide arm, spider rust proof chain. Grooved end valves have chain wheels mounted to the gear operator hand wheels, sprocket rim and guide arms are made of cast aluminum, chain is galvanized steel. Based on Roto Hammer, Babbitt or approved substitution.	
				Section 23 05 29 -Hanger and Supports for HVAC Piping and Equipment	
			1	All hanger and support components shall be U.L. and F.M. listed for fire protection.	
			2	Inserts shall be MSS Type 18; carbon steel body and nut, galvanized finish.	
			3	Upper Attachments top beam clamps MSS Type 23 shall be carbon Steel galvanized finish beam clamp, hardened steel cup point set screw and locknut. Rating is contingent on rod and bolt size.	
			4	Upper Attachments Bottom Beam Clamp MSS Type 23 – Shall be carbon Steel galvanized finish beam clamp, hardened steel cup point set screw and locknut and retaining clip model #755c. Rating is contingent on rod and bolt size.	
			5	Upper Attachments Center Beam Clamp MSS Type 21 shall be malleable iron jaw and square head bolt and nut with galvanized finish. Rating is contingent on rod and bolt size.	
			6	Clevis Hanger MSS Type 1 shall be carbon steel, galvanized for interior and exterior use, sized to accommodate required insulation. Rating is contingent on rod and bolt size.	
			7	Pipe Rings MSS Type 10 shall be carbon steel, galvanized for black steel. Rating is contingent on rod and bolt size.	
			8	Saddle Support MSS Type 38 shall be cast iron saddle, black steel lock nut nipple, cast iron reducer all with galvanized finish. Suitable for standard field cut and threaded galvanized steel pipe. Cast iron floor flange.	

Will Comply	Will Not Comply	N/A			Remarks for Not Complying
				DIVISION 23 - HVAC SYSTEMS (cont.) **Section 23 05 29 -Hanger and Supports for HVAC Piping and Equipment**	
			9	Welded Steel Bracket MSS Type 32 shall be welded carbon steel rate for 1500 lbs., with galvanized finish. Rating is contingent on rod and bolt size.	
			10	Riser Clamps MSS Type 8 shall be carbon steel, galvanized finish for black steel or galvanized pipe, plastic coated for cold steel, copper, glass or brass pipe rated for a minimum of 220 lbs. at 3/4" size.	
			11	Pipe sleeve wall shall be Schedule 40 carbon steel pipe sized to accommodate pipe, insulation and fire stopping. If sleeves are field cut coat cut edges with cold galvanizing spray, ZRC or approved substitution.	
			12	Floor or Exterior Walls below grade shall be schedule 40 steel pipe with anchor and water stop hot dip galvanized after fabrication. Sized to accommodate pipe and waterproofing or fire stopping. Refer to Division 07 for fire stopping requirements. Sleeve length will be sized to allow a minimum of 1/2" extension below floor or exterior side of a wall below grade and 1 1/2" extension above floor and 1/2" extension on interior side of an exterior wall below grade.	
			13	All penetrations of roof shall be in accordance with requirements of Division 07 - Thermal and Moisture Protection.	
			14	Exterior wall penetration below grade shall be C900 PVC sized one size larger than through penetrant, to extend 6” minimum beyond both sides of stem wall.	
			15	Where supports are in contact with glass, aluminum or brass pipe provide plastic coating on supports, or wrap pipe with sheet plastic.	
			16	Interior hangers, supports, including attachments that are plain steel shall be primed black prior or after installation.	
			17	Hangers and supports, including attachments, exposed to weather or located in utility tunnels or accessible utility trenches or subject to spillage shall be hot dip galvanized after fabrication.	
			18	The location of hangers and supports shall be coordinated with the structural work to ensure that the structural members will support the intended load.	
			19	Provide hex head nut on rod at top and bottom of clevis hanger yoke, and at each rod connection to intermediate and upper attachment. Rod nuts shall be securely locked in place.	
			20	Hanger rods shall be subject to tensile loading only. Where lateral or axial movement is anticipated, use suitable linkage in hanger rod to permit swing.	
			21	Hangers shall be fabricated to permit adequate adjustment after erection while still supporting the load. Turnbuckles shall be provided where required for vertical adjustment of the piping.	
			22	Supports for vertical piping shall be located at each floor or at intervals of not more than 15 feet and at intervals of not more than 8 feet from end of risers. Where supports are provided on intermediate floors spaced 15 feet or less between floors, no additional supports are required other than those specified for end of risers.	
			23	A hanger or support shall be provided adjacent to each piece of equipment to ensure that none of the pipe weight is supported from the equipment.	
			24	All hangers and supports shall meet the requirements of NFPA-13, 2013 Edition, Chapter 9.	

Will Comply	Will Not Comply	N/A			Remarks for Not Complying
				DIVISION 23 - HVAC SYSTEMS (cont.) **Section 23 05 29 -Hanger and Supports for HVAC Piping and Equipment**	
			25	Hanger centerline spacing shall be reduced by 50% in areas of concentrated valves and/or fittings, also no more than a maximum distance of 12 inches from valves, fittings and/or couplings, or 24 inches from a change in direction.	
			26	Parallel piping may be supported by trapeze hangers consisting of steel angle, channel, or beam suspended by steel rods attached to upper structure. Piping may be supported above, or suspended below, the angle, channel, or beam.	
			27	Sleeves shall not be installed in structural members, except where indicated or approved.	
			28	Each sleeve shall extend through its respective wall, floor, or roof, and shall be cut flush with each surface, except as indicated otherwise.	
			29	Unless otherwise indicated, sleeves shall be of a size to provide a minimum of 1/4 inch clearance all around between the pipe and inside of sleeve, or between jacket over insulation and sleeve.	
			30	Provide fire stopping, waterproofing and/or insulation as required. (Refer to Div. 07).	
			31	Sleeves are not required in existing structures where openings through existing concrete floors, walls, or roof are core drilled.	
			32	Pipe Seals shall be composition Plastic Pressure Plates, zinc coated bolts, nuts and metal parts, composition rubber sealing element designed for long term stability rated for temperatures of 40°F to +250°F.	
			33	Provide pipe seals for all pipe sleeves used in external walls, floor slabs on grade and upper floors where spillage may occur.	
				Section 23 05 48 -Vibration and Seismic Controls for HVAC Piping and Equipment.	
			1	The vibration isolation materials manufacturer shall be responsible for the proper selection of spring rates to accomplish the specified minimum static deflections for all spring and pad type isolators based on the weight distribution of equipment to be isolated.	
			2	The vibration isolation materials manufacturer shall be responsible for the structural design of steel beam bases and concrete inertia bases to support mechanical equipment scheduled to receive a supplementary base.	
			3	Vibration isolation shop drawings shall show isolator locations, and load on each isolator, deflection, compressed spring height, solid spring height, spring diameters and color coding.	
			4	Where grooved-joint flexible pipe connectors are specified, manufacturer shall design the isolation system and include drawings showing all supports, restraints, etc. as required to ensure performance.	
			5	Type A: Double Deflection Neoprene Mount: Double deflection neoprene mountings shall have a minimum static deflection of 0.35". All metal surfaces shall be neoprene covered to avoid corrosion and have friction pads both top and bottom so they need not be bolted to the floor. Bolt holes shall be provided for these areas where bolting is required. On equipment such as small vent sets and close coupled pumps, steel rails shall be used above the mountings to compensate for the overhang.	

Will Comply	Will Not Comply	N/A			Remarks for Not Complying
				DIVISION 23 - HVAC SYSTEMS (cont.) **Section 23 05 48 -Vibration and Seismic Controls for HVAC Piping and Equipment.**	
			6	Type B: Spring Type Mount: Spring type isolators shall be free standing and laterally stable without any housing and complete with 1/4" neoprene acoustical friction pads between the baseplate and the support. All mountings shall have leveling bolts that must be rigidly bolted to the equipment. Spring diameters shall be no less than 0.8 of the compressed height of the spring at rated load. Springs shall have a minimum additional travel to solid equal to 50% of the rated deflection.	
			7	Type C: Restrained Spring Type Mount: Spring type isolators shall be laterally stable with housing and complete with 1/4" neoprene acoustical friction pads between the baseplate and the support. All mountings shall have leveling bolts that must be rigidly bolted to the equipment. Spring diameters shall be no less than 0.8 of the compressed height of the spring at rated load. Springs shall have a minimum additional travel to solid equal to 50% of the rated deflection. A housing shall be used that includes vertical limit stops to prevent spring extension when weight is removed. The installed and operating heights shall be the same. A minimum clearance of 1/2" shall be maintained around restraining bolts and between the housing and the spring so as not to interfere with the spring action. Limit stops shall be out of contact during normal operations. Mountings used out of doors shall be hot dipped galvanized.	
			8	Type D: Vibration Hangers: Vibration hangers shall contain a steel spring and 0.3" deflection neoprene element in series. The neoprene element shall be molded with a rod isolation bushing that passes through the hanger box. Spring diameters and hanger box lower hole sizes shall be large enough to permit the hanger rod to swing thru a 30o arc before contacting the hole and short circuiting the spring. Springs shall have a minimum additional travel to solid equal to 50% of the rated deflection.	
			9	Type E: Neoprene Isolation Pads: Neoprene isolation pads shall be single rib or crossed, double rib neoprene in shear pads, in combination with steel shims when required, having minimum static deflections as tabulated. All neoprene pads shall be true neoprene in shear using alternately higher and lower ribs to provide effective vibration isolation, and shall be molded using 2500 PSI tensile strength, oil resistant, compounds with no color additives. Pads shall be 45 or 65 durometer and designed to permit 60 or 120 psi loading, respectively, at maximum rated deflections. Neoprene in shear isolation pads shall be provided to meet tabulated minimum operating static deflections without exceeding published maximum static deflections. Use single or, crossed, double rib or laminated composites of both as required. When two pads of ribbed material are laminated, they shall be separated by, and bonded to, a galvanized steel shim plate.	
			10	Type F: Captive Neoprene Mounting: Captive Neoprene elements shall be arranged in opposition within a steel or ductile iron housing to provide positive mechanical restraint in all directions. Neoprene elements shall prevent metal to metal contact during normal operation. Bonded assemblies without mechanical interlocks are not acceptable. Neoprene elements shall be of bridge bearing quality as tabulated. All mountings shall have minimum 1.0 horizontal G ratings and anchorage preapproval “OPA” numbers from the Office of Statewide Health Planning and Development (OSHPD) in the state of California prior to 2010, attesting to the maximum horizontal and vertical load ratings. All mountings shall have bolts for rigid attachment to the equipment and adequate base bolting provision. Mountings shall have a minimum compression deflection of 0.3” (8 mm) rated for 3,150 lbs. Based on Mason BR-D-Yellow-70 no substitution.	
			11	Base Type 1: Structural Steel Base: All perimeter members shall be beams with a minimum depth equal to 1/10th of the longest dimensions of the base. Beam depth need not exceed 14" provided that the deflection and misalignment is kept within acceptable limits as determined by the manufacturer. Height saving brackets shall be employed in all mounting locations to provide a base clearance of one inch.	

Will Comply	Will Not Comply	N/A			Remarks for Not Complying
				DIVISION 23 - HVAC SYSTEMS (cont.) **Section 23 05 48 -Vibration and Seismic Controls for HVAC Piping and Equipment.**	
			12	Base Type 2: Inertia Bases: The base shall consist of rectangular structural beam or channel concrete forms for floating foundations. Bases for split case pumps shall be large enough to provide support for suction and discharge base ells. The base depth need not exceed 12" unless specifically recommended by the base manufacturer for mass or rigidity. In general, bases shall be a minimum of 1/12th of the longest dimension of the base, but not less than 6". Forms shall include minimum concrete reinforcement consisting of half inch bars or angles welded in place on 6" centers running both ways in a layer 1 1/2" above the bottom, or additional steel as is required by the structural conditions. Forms shall be furnished with steel members to hold anchor bolt sleeves when the anchor bolts fall in concrete locations. Height saving brackets shall be employed in all mounting locations to maintain a 1" clearance below the base. Inertia bases for pumps shall be large enough to support removable metal insulation cover and suction diffusers where they are used.	
			13	Base Type 3: Curb Mounted Equipment Base: Curb mounted rooftop equipment shall be mounted on vibration isolation bases that fit over the roof curb and under the isolated equipment. The extruded aluminum top member shall overlap the bottom member to provide water runoff independent of the seal. The aluminum members shall house cadmium plated springs having a 1-1/2" minimum deflection with 50% additional travel to solid. Spring diameters shall be no less than 0.8 of the spring height at rated load. Wind resistance shall be provided by means of resilient snubbers in the corners with a minimum clearance of 1/4" so as not to interfere with the spring action except in high winds. The weather seal shall consist of continuous closed cell sponge materials both above and below the base and a waterproof flexible duct like EPDM connection joining the outside perimeter of the aluminum members. Foam or other contact seals are unacceptable at the spring cavity closure. Caulking shall be kept to a minimum. Submittals shall include spring deflections, spring diameters, compressed spring height and solid spring height as well as seal and wind resistance details.	
			14	Grooved-joint flexible pipe connectors shall consist of a minimum of three flexible pipe couplings. Coupling shall contain a resilient elastomeric gasket conforming to the internal cavity of the coupling housing and providing a pressure responsive seal against the pipe to create a permanent leak tight seal. Assembly shall permit expansion, contraction and deflection and shall dampen noise and vibration.	
			15	Braided flexible pipe connectors constructed of stainless steel annular corrugated metal surrounded with a woven braid of high tensile stainless steel. Units capable of absorbing pump vibration and noise accept thermal expansion and reduce piping stress due to minor misalignment and pressure variations. Sizes 1/2" through 2" to have carbon steel male pipe thread connections. Sizes 2 1/2" and larger to have carbon steel plate flanges with ASA #150 bolt hole patterns. Sizes through 8" to be suitable for 150 psig working pressure at 200F.	

Will Comply	Will Not Comply	N/A			Remarks for Not Complying
				DIVISION 23 - HVAC SYSTEMS (cont.) **Section 23 05 48 -Vibration and Seismic Controls for HVAC Piping and Equipment.**	
			16	Flexible neoprene connectors shall be used on all equipment as indicated on the drawings or on the equipment schedule. They shall be manufactured of multiple plys of nylon tire cord fabric and neoprene both molded and cured in hydraulic rubber presses. No steel wire or rings shall be used as pressure reinforcement. Straight connectors shall have two spheres. Connectors up to and including 1 1/2" diameter may have threaded ends. Connectors 2" and larger shall be manufactured with floating galvanized flanges recessed to lock the connector's raised face neoprene flanges. Hoses shall be installed on the equipment side of the shut off valves. Connectors shall be rated a minimum of 150 psi at 220F. Flanged equipment shall be directly connected to neoprene elbows in the size range 2 1/2" through 12" if the piping makes a 90o turn at the equipment. All straight through connections shall be made with twin spheres properly pre extended as recommended by the manufacturer to prevent additional elongation under pressure. 12" and larger sizes operating above 100 psi shall employ control cables with end fittings isolated by means of 1/2" thick bridge bearing neoprene washer bushings designed for a maximum of 1000 psi.	
			17	Mass Loaded Vinyl Fabric: Mass loaded vinyl shall achieve the noise transmission loss and meet the physical requirements and flammability rating specified. It shall have a continuous operating temperature range from 40 to +220F and shall be resistant to oils, weak acids, alkalis and weathering.	
			18	All floor mounted equipment shall be installed on a housekeeping pad, in addition to any isolation or inertia base requirement.	
			19	Installation of all vibration isolation materials and supplemental equipment bases specified in this section of the specifications shall be accomplished following the manufacturers written instructions.	
				Section 23 05 53-Identification for HVAC Equipment	
			1	Pipe Markers: Sub-surface printed plastic with protective undercoating. Markers for outdoor installation shall be over-laminated with Tedlar™ on polyester to prevent ultraviolet to avoid damage and fading. Marker size, letter size, letter color, wording and background color shall be in accord with ANSI A13.1 – Scheme for the Identification of Piping Systems.	
			2	Valve Tags, indoor: 19 gauge brass, 1 1/2 inch round, with 1/4 inch high black pipe service letter abbreviation above 1/2 inch high black valve number. Valve tag attachment shall be 4 ply 0.018 copper wire meter seal or #6 solid brass bead chain with locking link.	
			3	Valve Tags, outdoor: 19 gauge Type 304 stainless steel, 1-1/2" round, with ¼ inch high pipe service abbreviation above 1/2 inch high black valve number. Valve tag attachment shall be 4 ply 0.018 stainless wire meter seal or #6 Type 304 stainless steel bead chain with locking link.	
			4	Equipment nameplate, indoor: 1/16 inch thick plastic with black satin surface and white core.	
			5	Equipment nameplate, outdoor:125 Mil rigid plastic constructed of printed legend sealed between two layers of chemically-resistant plastic to resist ultraviolet damage.	

Will Comply	Will Not Comply	N/A			Remarks for Not Complying
				DIVISION 23 - HVAC SYSTEMS (cont.) **Section 23 05 80 -Air Control and Accessories**	
			1	Expansion Tanks: Shall be constructed with materials and standards which comply with the American Society of Mechanical Engineers (ASME) Codes and Boiler and Pressure Vessel Code: Section VIII Pressure Vessels, Division 1.	
			2	Air Separators: Tangential flow pattern, welded steel construction, ASME stamped and rated for 125 PSIG working pressure at 350F, National Board Form U 1A. Provide perforated stainless steel air collector tube. Units are to submitted without a strainer.	
			3	Automatic Air Vent: Non-ferrous, automatic air vent rated for 240F and 150 PSIG.	
			4	Install automatic air vents at all high points of system to facilitate air removal for proper flow and heat transfer.	
				Section 23 05 93 -Adjusting, Balancing and System Testing	
			1	Test & Balance firms are to be hired and managed by the contractor or construction manager, not the mechanical contractor OR the Owner.	
			2	Verification of performance shall be done for all equipment and sequence of operation of automatic controls.	
			3	Checking sound levels and vibration isolators for proper function and measurement shall be performed.	
			4	Recording and reporting results on sub-contractors standard report forms and on commissioning data sheets where these have been provided shall be performed.	
			5	Provide testing of all smoke detectors that are installed in the HVAC system.	
			6	The HVAC system shall be tested and balanced twice: once in the summer cooling mode and once in the winter heating mode.	
			7	Adjusting, balancing and testing procedures and compilation of test data shall be performed by a Certified Test and Balance Engineer or by personnel trained and supervised by a Certified Test and Balance Engineer.	
			8	Test and balance personnel shall be qualified to perform testing and balancing in accordance with AABC or NEBB procedures.	
			9	Balance final air and water flow to within plus or minus 5 percent of specified quantities. Caution is urged on systems where diversity has been taken and the total flow exceeds the equipment capacity. In this case, the system must be sectioned as necessary to get proper terminal flow.	
			10	Water Balance: Readings from venturi flow meters, or automatic pressure independent flow control devices will be given highest priority as to accuracy. Where neither is specified pump curves and chiller or boiler pressure drops are to be correlated to establish flow. Pressure drop across coils or chillers is to be used to proportion flow. Volt and ampere readings will be used as checks. Temperature data will be used only as a performance check and not for balancing.	

Will Comply	Will Not Comply	N/A			Remarks for Not Complying
				DIVISION 23 - HVAC SYSTEMS (cont.) **Section 23 05 80 -Air Control and Accessories**	
			11	Air Balance: Readings from a pitot tube traverse will be given highest priority as to accuracy. Terminal flow shall be as taken from the terminal DDC flow readings. Outlet flow as established by flow hood will be used to pro rate air flow. Pressure readings as well as voltage and ampere readings will be used for check purposes only. Temperature readings will be used as a check against performance.	
			12	All readings shall be cross-checked for accuracy. These cross-checks shall be tabulated within the report.	
				Section 23 07 00 -HVAC Insulation	
			1	All products within the conditioned air stream or active plenums shall comply with the NFPA 90A Flame/Smoke rating of 25/50 and comply with UL 181 erosion limitations. Fire hazard ratings shall be as determined by NFPA 255, "Method of Test of Surface Burning Characteristics of Building Materials" ASTM E84 or UL 723.	
			2	All adhesives, cements, finishes, jackets, etc., shall be UL listed or labeled for use as applied to insulation and designed specifically for use in the installation.	
			3	All insulation shall be installed in accordance with National Commercial & Industrial Insulation Standards (NCIA).	
			4	Rigid Fiberglass shall be a resin bonded fibrous glass, flame retardant, factory applied all service jacket vapor barrier with self sealing pressure sensitive lap joints, molded to accommodate pipe, maximum vapor permeance of .02 perm/in. and a puncture resistance of 50 units, minimum density 4.0 lb./cf, maximum conductivity per 1" thickness of .23 at 75°F, .29 at 200°F and .43 at 400°F mean temperature. Based on Knauf Pipe Insulation or approved substitution.	
			5	Closed Cell Elastomeric (Small Pipe Sizes up to 5 Inches) shall be flexible, elastomeric, closed cellular, tubular molded to accommodate piping, smooth outer surface suitable for painting with vinyl lacquer type coating, water resistant, non absorbent, ozone resistant, minimum density of 4 lb./cf, maximum conductivity per 1" thickness of .27 at 75°F mean temperature. Based on Armacell LLC AP Armaflex and Self seal Armaflex 2000 or approved substitution.	
			6	Closed Cell Elastomeric (Large Pipe Sizes, 6" and Larger) Shall be sheet type, flexible, elastomeric, closed cellular, smooth outer surface suitable for painting with vinyl lacquer type coating, water resistant, non absorbent, ozone resistant, minimum density of 4 lb./cf, maximum conductivity per 1" thickness of 2.7 at 75°F mean temperature. Based on Armacell LLC Armaflex II or approved substitution.	
			7	Corner angles shall be minimum 28 gauge, 1 inch by 1 inch aluminum adhered to 2 inch by 2 inch heavy kraft paper.	
			8	Wire shall be soft annealed galvanized, or copper, 16 gauge, or nickel copper alloy.	
			9	Closed cell elastomeric insulated finish shall be a white water based flexible, acrylic latex enamel. WB Armaflex finish or approved substitution.	
			10	Elastomeric Insulation Adhesive: Air drying contact adhesive for securing sheets to flat or curved metal surfaces and joining seams and butt joints of elastomeric insulation. Suitable for temperatures to 180F, dried film not to exceed 25 for flame spread and 50 for smoke development when tested per ASTM E 84-84A method.	

Will Comply	Will Not Comply	N/A			Remarks for Not Complying
				DIVISION 23 - HVAC SYSTEMS (cont.) **Section 23 05 80 -Air Control and Accessories**	
			11	Vapor Barrier Mastic shall be an air drying flexible water based mastic used for applying a vapor barrier joint with glass cloth at insulation joints. Suitable for temperatures to 180°F, wet and dried film not to exceed 25 for flame spread and 50 for smoke development when tested per ASTM E 84-84A method. Maximum Perm rating of 0.08. , Childers Products Company, Inc. CP-35 Chil Therm® WB, Foster Products Corp. Product Data 30-80 Foster Vapor Safe® Coating, Marathon Industries, Inc. 590 LO-PERM, Richard's Paint Manufacturing CO., Inc. VBM-4, Vimasco Corp. 749 Vapor-Blok, or approved substitution.	
			12	Elastomeric Insulations: Air drying flexible water based finish used for finishing flexible elastomeric insulation. Suitable for temperatures to 180°F, wet and dried film not to exceed 25 for flame spread and 50 for smoke development when tested per ASTM E 84-84A method. Armacell LLC WB Armaflex finish or approved substitution.	
				Section 23 08 00 -Commissioning of HVAC Systems	
			1	Confirm with the SCPS Project Manager is Commissioning will be part of the project.	
			2	If the Commissioning is by a 3rd party request from the SCPS Project Manager the Commissioning specification from the 3rd party for incorporation into the project specifications.	
			3	If you are the Commissioning Agent for the project provide the following (at a minimum, consult the scope with your SCPS Project Manager): · Construction Verification Checklists for all components, equipment and systems. · Drawing Review at DD's and CD's (including all BAS Controls) · Submittal review of the BAS Controls system · Review of O&M Manuals · Functional Testing · T&B Review · Punch list of field items observed	
				Section 23 09 23 -Instrumentation and Control Devices for HVAC System	
			1	Refer to the attached specification section 23 09 23 in its entirety. Engineer shall fully review and edit this section and included with their documents. Any issues or deviations should be brought to the attention of the SCPS Project Manager and Engineer of Record prior to bidding or permitting the documents. Alerton is no longer an acceptable vendor. Exclude Alerton for Control devices.	
				Section 23 09 93 Sequence of Operations	
			1	Where modulation of a valve or damper is referred to then it shall mean the direct digital control of the valve or damper based on a control algorithm resident in the BAS software at the remote field panel. Unless noted otherwise the control algorithm shall be PID control. Optimum loop response shall be ensured by the use of a built in automatic loop tuner.	
			2	An Operator having the required level of password access shall be able to modify the Operator changeable or definable parameter(s) on-line from an I/O device such that the monitoring and control functions of the BAS shall not be affected during the period of the change. The mechanism by which the change is made shall be adequately described in the Operator's manuals. Where set points for control parameters such as setpoint or changeover temperatures, humidity's, & times are referred to in this Section they shall be Operator changeable on-line.	
			3	Where the sequences refer to the start/stop of a system this shall be initiated either by an Operator manually entered command or automatically by a software routine such as "Optimum Stop/Start", "Power Demand Control", "Programmed Stop/Start", etc. or via an interlock in the sequences of operation to other equipment or event(s).	

Will Comply	Will Not Comply	N/A			Remarks for Not Complying
				DIVISION 23 - HVAC SYSTEMS (cont.) **Section 23 09 93 Sequence of Operations**	
			4	When the motor controller is equipped with a HOA the motors shall only be controlled by the BAS when the HOA switch is in the auto position.	
			5	Firestats, freezestats, smoke and fire detectors and interlocked dampers shall be wired to shutdown motors when the HOA switch is in both the hand and auto positions. It shall not be possible for the BAS to override these or any other safety devices or any fire alarm system control functions.	
			6	Provide additional I/O points, whether or not such points are indicated in the Point Definition Sheets, if they are required in order to attain the requirements of the Contract Documents.	
			7	Where fans and dampers are to be interlocked, provide hardwire interlocks between the motor terminal strip and damper such that the damper shall be driven open when the motor is required to start. Motor start-up shall not occur until the damper end switch indicates the damper is in the full open position.	
			8	Where fans and dampers are hardwire interlocked, the interlocks shall apply in both the "hand" and "auto" positions of the HOA switch at the motor controller.	
			9	Where electric heat coil control calls for the electric heating coil to be staged/cycled on and off to maintain the required temperature set point, the control algorithm shall incorporate a deadband, changeable by the Operator, which shall prevent the too frequent on/off cycling of the heating coil.	
			10	Where electric heating coils are controlled by the BAS, the BAS shall not override any safety interlocks.	
			11	Where there are fans not identified within the sequence of operation, point definition sheets or schematic drawings that provide supply and/or exhaust air that are not controlled via a thermostat, they shall be hardwire interlocked to the controlling device. The supply fans shall be hardwire interlocked with their associated exhaust fan (if applicable) to operate simultaneously. The dampers shall be hardwire interlocked with the fans via end switches such that the fans cannot operate when the damper is not fully open. The damper status shall not be monitored by the BAS. If the supply or exhaust fan serves multiple dampers, the end switches of the dampers shall be wired in parallel as a group then wired in series with the fan's associated damper end switch to prevent the fan from operating unless both the fan's damper is open and at least one of the system dampers are open.	
			12	The point list is provided for convenience and is not intended to be all inclusive. All points required to provide the Sequence of Operation shall be included as if listed.	

Will Comply	Will Not Comply	N/A			Remarks for Not Complying
				DIVISION 23 - HVAC SYSTEMS (cont.) **Section 23 21 13 - Hydronic Piping**	
			1	Chilled Water Supply & Return: Furnish Piping, 1/4" thru 2": Contractor's option: Type L Hard-drawn Copper Tubing: ASTM B88, or Schedule 40 carbon steel, seamless; ASTM A 106, Grade B, Type S, or Schedule 10S stainless steel, ASTM A-312, Type 304/304L. Piping, 2-1/2" thru 10": Schedule 40 carbon steel, seamless or electric resistance welded, ASTM A-53, Grade B, Type S or ERW. Piping, 12" through 24": Standard Wt., carbon steel, electric resistance welded, ASTM A-53, Grade B, Type ERW. Pipe Fittings: 1/2" thru 2": Contractor's option: Wrought Copper, ANSI B16.22.; 150lb. malleable iron threaded; ASTM A-197, Mechanically formed tee fitting, as created by T-Drill, is an acceptable method of installation. or Stainless steel fittings shall be precision, cold drawn, stainless steel with elastomer O-ring seals, suitable for working pressure to 500-psig (3450-kPa). Victaulic Vic-Press. Pipe fittings 2 1/2" and larger: Schedule to match mating pipe, carbon steel, butt weld type, ASTM A 234. Weld-o-lets and thread-o-lets will be limited to 2 pipe sizes smaller than the pipe to which they are connected. Brazing: Contractors Option: 5% silver, 6% phosphorus, balance copper, 1190F melting point. AWS A5.8 number BCuP -3. J.W. Harris Stay-Silver® 5 or approved substitution, or 15% silver, 5% phosphorus, balance copper, 1190F melting point. AWS 5.8 number BCuP-5. J.W. Harris Stay-Silver® 15 or approved substitution, or 6% silver, 6.1% phosphorus, balance copper, 1190F melting point. QQ-B-654A number BCuP -5. J.W. Harris Dynaflow® 5 or approved substitution. Groove pipe above ground is NOT acceptable. If there is a deviation from this requirement consult the SCPS Project Manager and Engineer of Record for approval before allowing.	
			2	Polypropylene (PP-R or PP-RCT) maybe considered for condenser water applications, consult the SCPS Project Manager and Engineer of Record if it is acceptable. If used above ground the pipe must be sealed with a UV resistant paint.	
			3	Polypropylene (PP-R or PP-RCT) acceptable manufacturers are: Aquatherm, ISCO-Pipe Industries and NupiAmerica - Niron.	
				Section 23 21 13.13 - Pre-Insulated Underground Piping	
			1	The Division 23 sub contractor shall provide a complete survey of the route of the piping systems including location of all existing utilities and topography to the supplier of the piping systems.	
			2	The supplier of the piping systems shall be responsible for the design of the complete engineered preinsulated piping system, including carrier pipe, thermal insulation, protective jacketing, fittings, anchors, guides, expansion loops or joints and anchor block design. Piping shall be fully welded; NO grooved pipe underground is acceptable.	
			3	The supplier of the piping systems shall provide the installing contractor with complete installation drawings and specifications for trench preparation, concrete anchor or thrust block specifications. All units shall be part numbered to correspond to the installation drawings.	
			4	All components of the piping system shall be suitably inspected after fabrication by X ray or other means to ensure continuous insulation through each section.	
			5	Manufacturer shall provide a qualified technician who will be present during critical periods of the installation and testing of the system.	

Will Comply	Will Not Comply	N/A			Remarks for Not Complying
				DIVISION 23 - HVAC SYSTEMS (cont.) **Section 23 21 13.13 - Pre-Insulated Underground Piping**	
			6	After installation and prior to backfilling, the manufacturer's representative of all piping components provided in this section shall field inspect the piping system and certify in writing to the Owner's representative that the piping system has been assembled and installed within the guide lines of the manufacturer's written installation instructions. This certification shall include but not be limited to trench preparation, anchor, guide and thrust block construction and location, backfill material, expansion loop and joint construction.	
			7	Insulation: Polyurethane foam with the following minimum characteristics: K factor .13, Density 2PCF, closed cell content 90-95% in conformance with ASTM, 65% completely filling the angular space between carrier pipe and jacket.	
			8	Jacketing Material: High impact seamless polyvinylchloride (PVC) class 12454B compound conforming to STM 1784 type 1, grade 1.	
			9	Wall thickness of the PVC jacket shall be 2.375" through 4.00'O.D = 60 MILS; 5" through 6.625" OD = 85 MILS	
			10	Insulation of Straight Joints: After welding or soldering a PVC sleeve will be slid over the joint overlapping jacketing on both sides of the joint. The sleeve ends are to be taped to the jacket. After taping, an appropriate size hole is to be drilled in the sleeve and the joint filled with ETF-Foam. The hole is then to be plugged and taped. The entire joint is then to be covered with shrink-wrap for a permanent seal.	
			11	Acceptable Manufacturer's for pre–insulated pipe shall be Energy Task Force, Pre-insulated Piping Systems, Inc., Thermacor Process, Inc. or Thermal Pipe Systems, Inc.	
			12	Underground systems shall be buried in a trench of not less than 24 inches deeper than the top of the pipe jacket and not less than 18 inches wider than the combined O.D. of all piping systems. Backfill should be tamped compactly in place. No rock shall be used in the first foot of the backfill. To meet H-20 highway loading, there must be 24 inches from top of jacket to grade of the compacted fill.	
			13	Polypropylene (PP-R or PP-RCT) maybe considered for below ground applications, consult the SCPS Project Manager if it is acceptable.	
			14	Polypropylene (PP-R or PP-RCT) acceptable manufacturers are: Aquatherm, ISCO-Pipe Industries and NupiAmerica - Niron.	
				Section 23 21 23 - Hydronic Pumps	
			1	Pumps with Adjustable Frequency Drive (AFD) controls shall be selected to assure maximum electrical efficiency. Lowest permissible AFD rpm should be clearly shown on the drawing pump schedule and in the project manual.	
			2	Pumps and other items of equipment intended as backup shall be served by a separate and distinct set of controls, starters, etc. so that full backup protection is provided.	
			3	Preferred pump models are either end suction or vertical inline.	
			4	Maximum suction velocity shall be less than 10 FPS. Pump discharge velocity shall be less than to 14 FPS.	
			5	Pump selections shall be no more than 5% less than the scheduled pump efficiency.	

Will Comply	Will Not Comply	N/A			Remarks for Not Complying
				DIVISION 23 - HVAC SYSTEMS (cont.) **Section 23 21 23 - Hydronic Pumps**	
			6	Maximum impeller diameter shall not exceed 85% of the cutwater diameter.	
			7	Pump motors shall be NEMA Premium™ Efficiency. Motors for pumps with AFD's must have Class F insulation.	
			8	Pumps shall be factory tested, thoroughly cleaned and painted. Discharge and suction shall be factory covered to protect the volute/impeller from dirt and damage during shipment and storage.	
			9	Acceptable pump Manufacturers are Armstrong, Aurora, B&G, PACO, Patterson and TACO.	
				Section 23 21 30 - Ice Storage Pumping Package	
			1	Furnish and install a factory assembled variable speed packaged pumping system for Primary/Secondary Chilled Water. The system shall be a pre-assembled and pre-tested unit and shall require only suction and discharge pipe connections, electrical power connection(s) and necessary connections to the various field mounted transmitters and the building automation system.	
			2	The manufacturer of the Variable Speed Chilled Water pumping package must be listed by Underwriters Laboratories as an approved manufacturer of UL Packaged Pumping Systems. The complete Packaged Pumping System, including pumps, motors, control equipment, hydronic specialties, valves, fittings and manifolds must be UL Listed under Category QCZJ (Packaged Pumping Systems). In addition to the UL Listing for the complete system, the control panel assembly must be separately listed under UL 508A (Industrial Control Panels). The manufacturer shall furnish proof of the two listings as part of the submittal data.	
			3	All components shall be mounted on a structural steel base. The base shall be large enough to support the packaged pumping system's pumps, piping, control panel and adjustable frequency drive's (AFD's). Steel supports shall be welded to the base to support the piping, control panel and AFD's. Both the base and supports shall consist of structural steel components, all welded per the AISC Manual of Steel Construction, Part 4, "Welded Joints".	
			4	Acceptable Manufactures are: Canariis & Systecon.	

Will Comply	Will Not Comply	N/A			Remarks for Not Complying
				DIVISION 23 - HVAC SYSTEMS (cont.) **Section 23 23 00- Refrigerant Piping**	
			1	Refrigerant (RS/RL/RHG) Piping. System Design Pressure: 300 psig. Piping carrying Refrigerants shall be ACR copper. ACR Copper Refrigerant Piping: Piping, 3" and smaller: Type ACR hard-drawn copper tubing, ASTM B88, ANSI H23.1. Fittings, 3" and smaller, all types, wrought copper: ASTM B16.22, ANSI B16.22. All 90° elbows shall be the long radius type. Brazing: Contractors Option: 5% silver, 6% phosphorus, balance copper, 1190°F melting point. AWS A5.8 number BCuP -3. J.W. Harris Stay-Silverâ 5 or acceptable substitution. 15% silver, 5% phosphorus, balance copper, 1190°F melting point. AWS 5.8 number BCuP-5. J.W. Harris Stay-Silverâ 15 or acceptable substitution. 6% silver, 6.1% phosphorus, balance copper, 1190°F melting point. QQ-B-654A number BCuP -5. J.W. Harris Dynaflowâ 5 or acceptable substitution. Unions used shall be specifically designed for refrigeration piping.	
			2	Solenoid Valves: Liquid line shut off. Normally closed. Manual lift stem. Pilot operated. Synthetic seat for permanent tight shut off. 120 volt solenoid coil (interchangeable). Top grade brass, bronze and/or semi steel body materials. Acceptable Manufacturers: Sporlan, Alco, Hubbell, Phillips, Henry.	
			3	Filter Drier: Replaceable core type. Heavy steel, cadmium plated with external coat of paint. All internal parts cadmium plated. Outlet seal gasket with spring to prevent bypassing. Copper fittings brazed to steel shell, suitable for soldering with Sil Fos or Phos Copper solder. Molded porous core elements. Tie rod assembly to permit external assembly with one piece insert. Bolt and nut attachment. Size for refrigerant capacity and tonnage at 2 psi pressure drop. Acceptable Manufacturers: Sporlan, Alco, Hubbell, Phillips, Henry.	
			4	Moisture and Liquid Indicators: Suitable for R-410A. Accurately calibrated to change color for indication of moisture. Large full view sight glass. Removable indicator element for sizes 1 3/8" and up. Remove before soldering. Full line size for liquid lines up to 2 1/8" O.D. 3/8" bypass indicator with preformed installation kit on larger sizes. Acceptable Manufacturers: Sporlan, Alco, Hubbell, Phillips, Henry.	
			5	Sight Glasses: Similar to Sporlan "See-all" moisture and liquid indicator with solder type connections. Install sight glass of the same size as the liquid line.	
			6	Miscellaneous Valves and Accessories: Drain valves for all pressure vessels. Dual pressure relief valves with manifold for all pressure vessels. Refrigerant service valves where indicated. Pressure Temperature Test Ports and Test Kit: Brass or stainless steel body with threaded cap and gasket; Two self closing valves with intermediate pocket for added pressure protection; Pressure temperature test kits consisting of 0 - 150 psi pressure gauge with adapter, 25 125F testing thermometer, 0 220F testing thermometer, gauge adopted and protective carrying case (two required).	
			7	Thermometers: Red reading type, glass front, iron or phenol case, adjustable pattern, separable socket. Shall have 9 inch scale and 12 inch case. Operating range shall occur in middle half of total range Acceptable Manufacturers: Mueller, Taylor, Rochester.	
			8	Gauges: Liquid pressure gauges constructed with bronze tube, stainless steel movement, white dial, black micrometer, adjustable pointer, iron case with black flange iron or phenol screwed ring, bottom connection. Case diameter size shall be 4 1/2 inches minimum. Operating range shall occur in middle half of total gauge range. Provide needle valve for all gauges. Acceptable Manufacturers: Crosby-Ashton Type AAO, Ashcroft, Lonegran.	

Will Comply	Will Not Comply	N/A			Remarks for Not Complying
				DIVISION 23 - HVAC SYSTEMS (cont.) **Section 23 23 00- Refrigerant Piping**	
			9	Refrigerant Charge: Complete operating charge of R 410A.	
			10	High pressure receiver designed and constructed for 300 psi design working pressure with liquid seal float control, automatic liquid feed valve, drain and equalizer connections, liquid line filter drier, moisture indicator, three service and bypass valves, charge valve and manual purge valve.	
			11	Locking Refrigerant Caps: Precision machined from high grade brass surrounded by a protective aluminum shroud. Provide a 3-year warranty. Provide one multi key per project to maintenance personnel.	
				Section 23 25 00 - HVAC Water Treatment	
			1	The pre cleaning and chemical charging shall be by or supervised by personnel trained in the field of water treatment. Chemicals shall be charged into the system within 24 hours of flushing and during circulation.	
			2	All chemicals shall be compatible with system materials of construction and shall comply with all applicable EPA and regulatory agency standards.	
			3	After completion of the system the water treatment supplier shall train the owner in the proper maintenance procedures and future system requirements.	
			4	After completion of the system water treatment, the contractor shall provide a water analysis and certify in writing to the Owners Representative that the system or systems have been properly flushed, cleaned and charged with the proper chemical concentration and that the Owner has been instructed in proper maintenance procedures.	
			5	Chilled Water Closed Loop: Manual feeding of chemicals into filter style shot feeder and in turn into system in accordance with initial water evaluation and continuing test result requirements.	
			6	Feeding and Control Equipment: Five gallon combination filter feeders, quantity to be shown on the drawings. Provide twelve (12) filter bags or provide, one if filter is cleanable. All attic stock filters to be turned over to the SCPS Project Manager. Corrosion coupon rack including corrosion probe connection fittings, one carbon steel and one copper corrosion coupon with holders and two (2) corrosion coupon tees. Totalizing make-up water meter equal to Master Meter Multi-Jet for installation in make-up water line.	
			7	For the closed loop temporary filter, provide an HPF-1665-1-CL ANCOPureTM HPF Closed Loop Filter on the chilled water system. The filter must be installed and operational from the start-up of the chillers through substantial completion. The Owner shall be provided with a sample of the water each month from the contractor and the filter shall not be removed until the Owner and Engineer have signed off on the water quality.	
			8	Water Treatment Chemicals: All chemicals necessary for flushing and pre cleaning. All chemicals, in liquid form, necessary to control scale, corrosion, microbiological growth and water PH. Quantity to last 1 full year from date of start up.	

Will Comply	Will Not Comply	N/A			Remarks for Not Complying
				DIVISION 23 - HVAC SYSTEMS (cont.) **Section 23 25 00 - HVAC Water Treatment**	
			9	Side Stream Cartridge Filter System - Housing: A round multi-filter housing constructed of carbon steel with a 150 psi pressure rating at 300F. The housing design shall include a large rounded bottom sump area so that the filter baskets may have a rounded bottom for particulate accumulation. The top portion of the fixed housing shall be equipped with a carbon steel plate with holes cut for the filter baskets. Filter basket holes shall be equipped with buna O-ring gaskets to prevent bypass around filter. Housing shall include a davit swing arm to remove the top for access to filter housings. Access to the housing shall be through the use of swing bolts with eye-nuts. Housing shall also include the following features: vent and drain port and gauge ports to measure differential pressure across the filter media. Piping connections shall be either ANSI 150# flanges or grooved for mechanical joint connection. The entire assembly shall be sand blasted and finished inside and out with a two part epoxy finish.	
			8	Specify "Southwest Engineers" for the water treatment vendor. Confirm this is the current vendor with your SCPS Project Manager.	
			9	All strainers to be cleaned and witness by the SCPS Project Manager and Engineer of Record.	
				Section 23 31 00 - HVAC Ducts and Casings	
			1	All ductwork shall be fabricated within the guidelines established by the Sheet Metal and Air Conditioning Contractors National Association, Inc. (SMACNA) HVAC Duct Construction Standards Metal and Flexible, latest edition.	
			2	All ductwork shall be fabricated to withstand the pressure and velocity required on this project.	
			3	Single Wall Round Ductwork and Fittings shall be hot rolled, continuously annealed, hot dipped galvanized steel minimum of G-90, 0.90 oz./sf coating, conforms to ASTM A653. Duct Construction shall be spiral wound, lock seam construction, slip joint or flanged connections as noted below under couplings.	
			4	Single Wall Round Snaplock Seam Galvanized Steel Ductwork and Fittings shall be hot rolled, continuously annealed, hot dipped galvanized steel minimum of G-90, 0.90 oz./sf coating, conforms to ASTM A653. Metal Gauges shall be a minimum of 26 gauge, with remaining sizes conforming to the Sheet Metal and Air Conditioning Contractor's National Association, Inc. (SMACNA) HVAC Duct Construction Standards Metal and Flexible, latest edition.	
			5	Double Wall Round Ductwork and Fittings: Shall be hot rolled, continuously annealed hot dipped galvanized steel, minimum G-90, 0.90 oz./sf (.001 inch thick/side) coating, conforms to ASTM A653. Liner shall be 1" thickness flexible fibrous glass minimum density 1.5 lb./cf, maximum conductivity per 1" thickness of .27 at 75F mean temperature. Inner duct shall be hot rolled continuously annealed, perforated hot dipped, galvanized steel, minimum G-90, 0.90 oz./sf (.001 inch thick/side) coating, conforms to ASTM A653	
			6	Round Stainless Steel Ductwork and Fittings exhaust duct shall be constructed of 304 or 316 stainless steel as scheduled with a 2B mill finish.	

Will Comply	Will Not Comply	N/A			Remarks for Not Complying
				DIVISION 23 - HVAC SYSTEMS (cont.) **Section 23 31 00 - HVAC Ducts and Casings**	
			7	Uninsulated Round Flexible Ductwork High Pressure Application shall be factory fabricated assembly of a trilaminate of aluminum foil, fiberglass and polyester with a perm rating of .02 high tear strength and properties to resist temperature change, mildew and age hardening. It shall be mechanically locked, without adhesives, into a formed aluminum helix on the ducts outside surface and be U.L. listed 181 Class 1 and comply with NFPA 90A and 90B. The material shall have a pressure rating of 12" w.g. positive pressure and -5" w.g. negative pressure through a temperature range of -20F to +250F. Based on Type NI-35 as manufactured by Flexmaster U.S.A., Inc., ATCO Rubber Products UPC #7 or Flexible Technologies – Thermaflex S-LP-10.	
			8	Insulated Round Flexible Ductwork: High Pressure Application shall be factory fabricated assembly of a trilaminate of aluminum foil, fiberglass and polyester with a perm rating of .02, high tear strength and properties to resist temperature change, mildew and age hardening. It shall be mechanically locked, without adhesives, into a formed aluminum helix on the ducts outside surface and be U.L. listed 181 Class 1 and comply with NFPA 90A and 90B. The material shall have a pressure rating of 12" w.g. positive pressure and -5" w.g. negative pressure through a temperature range of -20F to +250F. The duct material shall be factory wrapped in a blanket of fiberglass insulation with a C factor of .23 or less. The insulation shall be encased in a fire retardant reinforced aluminum material vapor barrier with a perm rating of not over .05 grains per square ft. per hour per inch of mercury.	
			9	Insulated Round Flexible Ductwork: Low Pressure Application shall be factory fabricated assembly of a trilaminate of aluminum foil, fiberglass and polyester with a perm rating of .02, high tear strength and properties to resist temperature change, mildew and age hardening. It shall be mechanically locked, without adhesives, into a formed aluminum helix on the ducts outside surface. It shall be U.L. listed 181 Class 1 and comply with NFPA 90A and 90B. The material shall have a pressure rating not less than 6" w.g. positive pressure and -3" w.g. negative pressure through a temperature range of -20F to +250F. The duct material shall be factory wrapped in a blanket of fiberglass insulation with a C factor of .23 or less. The insulation shall be encased in a fire retardant reinforced aluminum material vapor barrier with a perm rating of not over .05 grains per square ft. per hour per inch of mercury.	
			10	Each duct section shall have both ends covered with polyethylene or other suitable material to protect against the entrance of dirt, debris or water during shipment and storage prior to installation.	
				Section 23 31 01 - Shop Fabricated Ductwork	
			1	All ductwork shall be fabricated within the guidelines established by the Sheet Metal and Air Conditioning Contractors National Association, Inc. (SMACNA) HVAC Duct Construction Standards Metal and Flexible, latest edition.	
			2	All ductwork shall be fabricated to withstand the pressure and velocity required on this project.	
			3	All components, fasteners, sealants, adhesives, etc. in the conditioned air stream or exposed in active or non active plenums shall conform to the NFPA 90A Standard for the Installation of Air Conditioning and Ventilating Systems and Standard for Flame/Smoke/Fire Contribution of 25/50/0.	
			4	All ductwork shall conform to UL standard UL 181 Factory Made Air Duct Materials and Duct Connectors, latest edition. Applicable sections shall apply to shop fabricated ductwork.	
			5	After fabrication and installation of all shop fabricated ductwork the fabricator and installer, if not the same, shall certify in writing to the Owner's representative that all shop fabricated ductwork and installation of same meets or exceeds the quality standards established by SMACNA.	

Will Comply	Will Not Comply	N/A			Remarks for Not Complying
				DIVISION 23 - HVAC SYSTEMS (cont.) **Section 23 31 01 - Shop Fabricated Ductwork**	
			6	Galvanized Steel Ductwork: Interior, exposed or concealed shall be hot rolled steel continuously annealed and hot dipped galvanized sheet or coil, minimum G-90, 0.90 oz./sf coating suitable for forming without flaking or peeling, suitable for welding or soldering. Zinc coating shall not be impaired from double seaming, breaking or roll forming. 14 ga. and lighter conforming to ASTM A653. 13 ga. and heavier conforming to ASTM A653.	
			7	Galvanized Steel Ductwork: Exterior or Areas Requiring Painting shall be hot rolled steel continuously annealed and hot dipped galvanized sheet or coil, minimum G-90, 0.90 oz./sf (.001 inch thick/side) coating with a mill applied phosphate film suitable for insulating the paint from the drying action of the zinc, capable of forming without flaking or peeling, suitable for welding or soldering. Zinc coating shall not be impaired from double seaming, breaking or roll forming. 14 ga. and lighter conforming to ASTM A653 13 ga. and heavier conforming to ASTM A653.	
			8	Stainless Steel Ductwork: Interior Concealed or Exterior shall be Type 304, finish No. 2D conforming to ASTM A 240 and Federal Specification QQ-S-766.	
			9	Stainless Steel Ductwork: Interior Exposed shall be Type 304, finish No. 4, conforming to ASTM A 240 and Federal Specification QQ-S-766.	
			10	All ducts passing through partitions or walls shall pass through at a 90 degree angle. The duct shall be sleeved with the space between the sleeve and duct properly sealed with firestopping material (Refer to Division 07 for Firestopping materials). The sleeve shall be permanently affixed to the wall.	
			11	All ducts located outdoors and not of welded construction shall have seams and transverse joints sealed water tight with duct sealer, arranged to shed water and finished with insulating duct coating.	
			12	Ductwork rated at over 3" positive pressure shall be leak tested using a test rig as described in the SMACNA Balancing Manual.	
			13	Leaks must be located and sealed. All audible leaks, regardless of size, must be sealed.	
				Section 23 33 00 - Air Duct Accessories	
			1	Duct Access Doors (size as large as possible to accommodate the duct size and damper access): Low Pressure Ductwork: Rating up to 2" w.g. positive or negative. Frame: Minimum 22 gauge galvanized steel or aluminum, minimum 5/8" knock over edge, neoprene gasket between frame and duct and frame and door. Door: Minimum 24 gauge galvanized steel or aluminum, continuous hinge and cam latches or minimum 2 cam latches, double wall construction, fiberglass insulated thickness to match ductwork.	
			2	Duct Access Doors (size as large as possible to accommodate the duct size and damper access): High Pressure Ductwork: Rating: Up to 10" w.g. positive pressure. Frame: Minimum 16 gauge galvanized steel with "Z" shaped reinforced corners, polyurethane gasket between frame and duct and frame and door. Door: Minimum 16 gauge galvanized steel or aluminum, minimum 2 spring latches, double wall construction, fiberglass insulated with thickness to match ductwork.	

Will Comply	Will Not Comply	N/A			Remarks for Not Complying
				DIVISION 23 - HVAC SYSTEMS (cont.) **Section 23 31 01 - Shop Fabricated Ductwork**	
			3	Fire Doors shall be minimum 24 gauge galvanized steel frame suitable for connection to ductwork without transition, minimum 24 gauge galvanized steel curtain type blades located out of the airstream, thickness coordinated with wall construction. Where an active smoke control system exists (refer to Section 23 09 93) the damper shall be capable of closing in an airstream moving at a minimum of 2000 feet per minute and operating at 4" w.g. pressure (dynamic damper).	
			4	Fire Dampers shall be minimum 24 gauge galvanized steel frame suitable for connection to ductwork without transition, minimum 24 gauge galvanized steel curtain type blades located out of the airstream, thickness coordinated with wall construction. Where an active smoke control system exists (refer to Section 23 09 93) the damper shall be capable of closing in an airstream moving at a minimum of 2000 feet per minute and operating at 4" w.g. pressure (dynamic damper).	
			5	Smoke Dampers: Low and Medium Pressure Ductwork frame shall be 16 galvanized steel. Damper blades shall be 14 gauge true airfoil design constructed of galvanized steel of low leakage non-heat degradable design with friction free silicone rubber edge type for a smoke seal to 450F incorporated into blade and frame shapes. Blade shall be suitable for installation in systems with a maximum velocity of 4,000 FPM and 8" w.g. pressure at closure.	
			6	Smoke/Fire Dampers: Low and Medium Pressure Ductwork construction shall be single damper designed and rated for combination smoke/fire duty.	
			7	Backdraft Dampers: Low Pressure Ductwork shall be minimum 16 gauge (.064") galvanized steel or extruded aluminum. Blades shall be minimum 16 gauge (.064") galvanized steel or extruded aluminum parallel blade action, brass bearing, non ferrous or de-iron pivot pins, gasketed blades. Accessories shall counter balance and weights suitable for assisting or retarding as indicated on the drawings.	
			8	Volume dampers shall be provided where indicated, in all branch ductwork and construct as follows: Provide single blades to a maximum of 10 inch blade width. Provide inside end synthetic bearings and locking quadrants with wing nuts. Friction locks are not permitted. Break damper blades on both edges for stiffness. Provide multi-blades on dampers 12 inches and larger with inside pins and molded synthetic bearings, and 2 inches wide by 1/8 inch thick structural galvanized channel frame. Provide galvanized connecting bar with molded synthetic bearings on multi-blade dampers. Provide stand-Off bracket for installation in externally insulated duct. All handles to have an orange 24" ribbon tied to them for marking.	
			9	Prefabricated Casing Panel sections shall consist of an outer sheet of 18 gauge and an inner sheet of 22 gauge galvanized steel. Inside panel surfaces shall have 3/32 inch diameter perforations on 3/16 inch centers. Panels shall be completely metal enclosed; shall be minimum (2) (4) inches thick; and the space between inner and outer surfaces shall be filled with acoustic material which will not settle, shed or dust. Housing shall be factory fabricated and field assembled with joining members serving to provide structural rigidity to 10 inches water pressure differential, either positive or negative. Structure shall be tested and rated for known structural deflection.	
			10	Flexible Duct Connectors (Required on all duct transitions from AHU to ductwork): Indoor Applications: Shall be heavy glass fabric double Coated with neoprene, Minimum of 30 oz./sy, Resistant to abrasion and damage due to repeated flexing, waterproof and air tight, minimum 26 gauge galvanized steel or .032" aluminum edge a minimum of 2 1/2" wide each side.	
			11	Flexible Duct Connectors (Required on all duct transitions from AHU to ductwork): Outdoor Applications shall be heavy glass fabric double coated with hypalon minimum of 26 oz./sy resistant to abrasion and damage due to repeated flexing, water proof, airtight and resistant to damage from direct sunlight, minimum 26 gauge galvanized steel or .032" aluminum edge at minimum of 2 1/2" wide each side. Coordinate the flex width with the schedule in 3.3 - Schedule.	

Will Comply	Will Not Comply	N/A			Remarks for Not Complying
				DIVISION 23 - HVAC SYSTEMS (cont.) **Section 23 31 01 - Shop Fabricated Ductwork**	
			12	Roof Mounted Air Outlets and Inlets: Louver Faced shall be heavy gauge aluminum extruded louvers, heavy gauge aluminum internal construction, insulated aluminum roof, weather shields designed to prevent wind blown rain and snow from entering at base and to prevent condensation falling from roof or blades from entering duct, aluminum wire mesh bird screen, hinged roof.	
			13	Roof Mounted Air Outlets and Inlets: Low Profile Hood Type shall be heavy gauge aluminum construction, hinged hood, all seams continuously welded, hoods sloped for interior condensate drainage and exterior weather drainage, aluminum wire mesh bird and bug screen.	
			14	Louvers (Exhaust) shall be extruded aluminum. Provide bird screen at exhaust louvers. Louvers are to be clear anodized and match the existing exterior window frames. All louvers to be fully compliant with the FMC and any EHPA requirements. Provide wind driven Florida Product Approved, missile impact louvers (as applicable).	
			15	Louvers (Outside Air Intake) shall be extruded aluminum. Provide bird screen at all outside air intake louvers. See hardware cloth requirements. Louvers are to be clear anodized and match the existing exterior window frames. All louvers to be fully compliant with the FMC and any EHPA requirements. Provide wind driven Florida Product Approved, missile impact louvers (as applicable).	
			16	Hardware Cloth shall be 4 mesh galvanized steel, plain weave with .035 wire.	
			17	Aluminum Louver – (Brick Vent) shall be extruded aluminum, 0.100" minimum wall thickness for frame and blades. Frame depth 4". 8-1/8"W x 7-3/4"H with 1-1/2 flanged frame and aluminum mesh screen. Finish to be "Kynar 500" fluropolymer coating having dry thickness of approximately 1.2 mils when baked at 450F. Color to be selected by Architect. Minimum free area shall be 39% of nominal size.	
				Section 23 36 00 - HVAC Fans	
			1	Centrifugal Roof Exhaust Fans: Shall be direct or adjustable pitch belt drive as scheduled. Housing heavy gauge, aluminum, weatherproof. Wheels shall be centrifugal type.	
			2	Inline Centrifugal Fans: Shall be heavy gauge aluminum housing with integral aluminum motor mounting base and straightening vanes heliarc mounted to housing at discharge end. Inlet and outlet flanges. Non overloading, backwardly inclined aluminum air foil blower wheel with blades heliarc welded to the hub. Dynamically balanced. All wheels keyed to shaft. Belt drive or direct drive as scheduled with motor out of the airstream. Aluminum support bracket. Belt drive units to have locking strap and bolt to permit	
			3	Ceiling Exhaust Fans: Shall be direct or belt driven as scheduled. Housing heavy gauge metal with sound attenuating duct liner. Wheels shall be forward curved centrifugal type with permanently lubricated ball bearings. Provide integral or matched inlet grille provided by the fan manufacturer. Motors continuous duty permanent split capacitor type permanently lubricated bearings. Factory wired to junction box with cord and plug or disconnect switch. Provide integral fan speed controller.	
			4	Provide fans capable of accommodating static pressure variations of plus 10 percent.	
			5	Provide matched belts and balanced variable sheaves for motors 15 hp and under, and fixed sheaves for 20 hp and over. Provide belt and sheave changes if required for proper air balancing.	
			6	Provide belt guards on belt driven fans.	

Will Comply	Will Not Comply	N/A			Remarks for Not Complying
				DIVISION 23 - HVAC SYSTEMS (cont.) **Section 23 36 00 - HVAC Fans**	
			7	Provide safety screen where inlet or outlet is exposed.	
			8	Provide flexible connections on inlet and outlet of fans connected to ductwork	
			9	Acceptable Fan Manufacturer's are Acme, Greenheck, Loren Cook and Penn.	
				Section 23 36 00 - Air Terminal Units	
			1	Single Duct VAV Terminal Units: Unit casing: galvanized steel, fully lined with 1 in. thick, 1-1/2 lb./cu. ft. density, nylon scrim reinforced foil skin vapor barrier insulation. Insulation shall be dual thermal/acoustical fiberglass insulation meeting NFPA 90A requirements and UL 181 erosion control requirements. All cut edges of insulation shall be sealed by a heavy adhesive seal to prevent fibrous material from entering the airstream. A special sheet metal picture frame bracket shall be used to enclose the liner of the discharge end to prevent the liner from dislodging under extremely high pressure conditions and to prevent damage during installation. Casing shall have access doors or panels suitable for equipment service. Insulated damper with leakage not to exceed 2% of design flow at 3.0" w.g. All joints sealed with adhesive as required. Unit to have air inlet collar and flanged or slip and drive discharge connection.	
			2	Hydronic Heating Coil: One or two rows, same end connections. Tube to header joints expanded and reinforced with brass bushing for pressure tight joint. Maximum working ratings 225 PSIG, 325F. Plate type aluminum fins with full fin collars for maximum fin tube contact and accurate spacing, mechanically bonded to tubes for permanent fin tube bond. Galvanized steel casing with flanged or drive and slip connection. Heating coil integral with the terminal unit.	
			3	Support terminal box independent of ductwork.	
			4	Install terminal boxes to provide maximum clearance for electrical and maintenance access.	
			5	Coordinate the terminal box controls with the building control system contractor to ensure that all miscellaneous accessories required for proper operation are included and that the direct/reverse action normally closed/normally open functions are properly coordinated.	
			6	If terminal boxes are installed in areas where access to controls thru a lay in or removable ceiling is not possible, coordinate the locations of access doors thru the ceiling.	
			7	Be sure minimum and maximum CFM settings agree with the requirements of the terminal unit schedule.	
			8	Provide rigid metal straight duct equal to four diameters on inlet of all terminals.	
			9	Provide transitions from duct size to terminal inlet or outlet size as required.	
			10	Provide flexible duct connection at outlet plus a minimum of 12" and a maximum of 36"of straight flexible duct upstream of rigid duct at inlet.	
			11	Acceptable Terminal Unit Manufacturer's are ETI, EH Price, Krueger, Nailor, Titus and Trane.	

Will Comply	Will Not Comply	N/A			Remarks for Not Complying
				DIVISION 23 - HVAC SYSTEMS (cont.) **Section 23 37 13 - Diffusers, Registers and Grilles**	
			1	Sidewall or Ceiling Mounted Return/Exhaust Grille shall be heavy gauge aluminum border and 1/2" x 1/2" x 1/2" aluminum eggcrate.	
			2	Sidewall Double Deflection Supply Grilles shall have an aluminum frame with aluminum shaped blades having long blades on front.	
			3	Ceiling Mounted Return Air Filter Grille shall be heavy gauge aluminum border and 1/2" x 1/2" x 1/2" aluminum eggcrate. Concealed hinged core with integral filter frame and start-up plus spare filter. Border suitable for use in ceiling specified in Contract Documents.	
			4	Sidewall or Ceiling Mounted, Return Register shall be heavy gauge frame and horizontal bars. Bars set at 45° fixed deflection. Allen key operated opposed blade damper.	
			5	Square Ceiling Diffuser - Surface or lay-in mounted type with a 3 cone diffuser. Round collar size as indicated. Aluminum construction only.	
			6	Linear Diffusers shall be extruded aluminum, adjustable pattern control thru diffuser face standard outer finish, black pattern controllers and all other internal surfaces. Length and number of slots as indicated. Finished outer color to be selected by A/E.	
			7	Linear Diffuser Plenums shall be galvanized sheet metal, minimum gauge, round or equivalent round oval inlet, lined with fiberglass insulation a minimum of 1/2" thick with black erosion barrier minimum 2.0 lb./cf density, maximum conductivity per 1" thickness of .26 at 75°F mean temperature, continuous perforated diffuser baffle.	
			8	Coordinate the proper grille style and frame style with the final approved ceiling construction and install grilles, registers and diffusers in accordance with the requirements of the architectural reflected ceiling plan.	
			9	Coordinate the color requirements for all grilles, registers and diffusers with the SCPS Project Manager, Engineer of Record, and the Architect.	
			10	Acceptable Grille, Register and Diffuser Manufacturer's are EH Price, Krueger, Metal Aire, Titus and Trox.	
				Section 23 41 00 - Particulate Air Filtration	
			1	Extended Surface, Pleated, Panel Type Filters: Extended surface pleated, electrostatically charged synthetic media, expanded metal frame with rust inhibitor, wire support grid, dry type. Dry filtering principal. 2" thick, MERV 8 (40-45% minimum efficiency) & MERV 13 (80-85% minimum efficiency), UL Class 2 approved, maximum face velocity 500 FPM. Initial maximum air friction at 500 FPM equals .30 w.g. Air friction at change-out equals 1.00" w.g. Air filtration efficiency shall be a minimum of MERV 8.	
			2	Filter Gauges: Dry type gauge with appropriate pressure range for "final" pressure listed in schedule. Include static tips, compression fittings, 1/4" aluminum tubing and plastic vent valves.	
			3	Provide removable and cleanable metal "prefilter" in all outside air duct to protect the air flow measuring station.	
				Section 23 44 00 - Air Purification System	
			1	Technologies that do not address gas disassociation such as UV Lights, Powered Particulate Filters and/or polarized media filters shall not be considered. Uni-polar ion generators shall not be acceptable. "Plasma" particulate filters shall not be acceptable.	

Will Comply	Will Not Comply	N/A			Remarks for Not Complying
				DIVISION 23 - HVAC SYSTEMS (cont.) **Section 23 44 00 - Air Purification System**	
			2	The Air Purification Technology shall have been tested by UL or Intertek/ETL to prove conformance to UL 867-2007 including the ozone chamber testing and peak ozone test for electronic devices.	
			3	Bi-polar Ionization (BPI) shall be installed in all chilled water air handling units.	
			4	Provide a BPI Plasma detector in the supply ductwork connected to the BAS.	
			5	Provide BPI Calculations to SCPS at the Design Development submittal.	
			6	Acceptable Manufacturers are: Bioclimatic, Global Plasma Solutions and Plasma-Air.	
				Section 23 64 26 - Rotary Screw Air Cooled Chillers	
			1	The chiller shall be a complete factory-packaged unit including evaporator, condenser, sub-cooler, oil separator, compressor, motor, lubrication system, microcomputer control center and all interconnecting unit piping and wiring. The unit shall contain a full charge of HFC134a or HFC407c refrigerant and oil. The unit shall be capable of starting with up to 95F entering water temperature to the cooler.	
			2	Unit casing shall be enclosed in a 12 gauge galvanized steel casing, zinc phosphatized, with an electrostatically applied baked enamel finish, capable of withstanding the Federal Test Method Std. No. 141 (Method 6061) 500 hr. salt spray test. Provide louvered hail guards on all chillers.	
			3	Compressor and Lube Oil System - The compressor shall be a horizontal mounted semi-hermetic twin or single screw rotary compressor designed to operate at a maximum 3600 RPM for 60 Hertz. The compressor housing shall be precision machined to provide minimal clearance for the rotors. The rotors shall be manufactured from forged steel and designed with asymmetric profiles. The compressor shall incorporate a complete anti-friction bearing design. A check valve shall be installed in the compressor housing to prevent compressor rotor backspin caused by system refrigerant pressure gradients during shut-down.	
			4	Refrigerant Components - Each refrigerant circuit shall include: pressure relief device; liquid line and suction line shutoff valves; filter drier with removable core; moisture indicating sight glass. Maximum operating pressure thermal expansion valve only shall be provided to prevent compressor overload by limiting inlet suction pressure. All suction lines shall be insulated with close fitting cellular foam insulation.	
			5	The chiller manufacturer shall provide a communication interface that shall permit complete exchange of chiller data with any BAS system specified in Section 23 09 23 through the use of an BACnet translator. The BACnet translator shall allow the BAS system to issue commands to the chiller to control its operation, change set points, and report all data to the BAS system that is normally available to an integrated control system. The BACnet translator shall be able to provide the interface for up to two chillers.	
			6	The starters for rotary screw chillers shall be in a weather tight enclosure with removable plates to allow for power wiring connections. A Wye-Delta closed transition starter shall be provided for each compressor.	
			7	AFD's are acceptable for high efficiency air cooled applications.	
			8	Acceptable air cooled chiller Manufacturer's are Carrier, Daikin and Trane.	

Will Comply	Will Not Comply	N/A			Remarks for Not Complying
				DIVISION 23 - HVAC SYSTEMS (cont.) **Section 23 66 00 - Air Cooled Liquid Chillers**	
			1	General Unit Description: Factory assembled, single-piece chassis, air-cooled liquid chiller. Contained within the package shall be all factory wiring, piping, pumps, controls, and refrigerant charge (HFC-410A). Refer to the chilled water schematic for the requirements of all devices and accessories. All chillers must follow the local Utility Company guidelines to ensure chiller efficiencies meet or exceed the qualifying rebate.	
			2	Cabinet: Frame shall be heavy-gage, with a powder coated paint finish for both aesthetic appeal and to offer more resistance to corrosion. Units shall be constructed of a galvanized steel frame with galvanized steel panels and access doors. Component surfaces shall be finished with a powder-coated paint. The coating or paint system shall withstand a 1000-consecutive-hour salt spray application in accordance with standard ASTMB117. Provide Architectural louvered hail guards for the entire chiller (not just the condenser coil) manufactured and installed by the chiller manufacturer.	
			3	Compressors: Fully hermetic scroll type compressors with R410A optimized and dedicated scroll profile. Direct drive motor cooled by suction gas with only three major moving parts and a completely enclosed compression chamber which leads to increased efficiency. Each compressor will have crankcase heaters installed and properly sized to minimize the amount of liquid refrigerant present in the oil sump during off cycles.	
			4	Evaporator: The evaporator shall be a high efficiency, brazed plate-to-plate type heat exchanger consisting of parallel plates. Braze plates shall be stainless steel with copper braze material. The evaporator shall be protected with an etched foil heater and insulated with 1-1/2 inch insulation. This combination shall provide freeze protection down to -20F ambient temperatures while the heater is powered. Contractor shall provide separate power to energize heater and protect evaporator while chiller is disconnected. The water side working pressure shall be rated at 150 psig and tested at 1.5 times maximum allowable water side working pressure. The refrigerant side working pressure shall be rated at 460 psig (29.6 bars) and tested at 1.1 maximum allowable refrigerant side working pressure	
			5	Condenser: The condenser coils shall consist of copper tubes mechanically bonded into plate-type aluminum fins. A subcooling coil shall be an integral part of the main condenser coil. The maximum allowable working pressure of the condenser shall be 650 psig (44.8 bars). The condensers shall be factory proof and leak tested at 715 psig (49.3 bars). Low Sound Fans shall be dynamically and statically balanced, direct drive, corrosion resistant glass fiber reinforced composite blades molded into a low noise fan blade. Low speed fan motors shall be three-phase with permanently lubricated ball bearings and individually protected by circuit breakers. Unit shall be capable of starting and running at outdoor ambient temperatures from 32F to 125F (0C - 52C) for all sizes. Confirm with SCPS on each project if the option to add coil coating is required for each project.	
			6	Enclosures: Mount starters in a UL1995 rated panel for outdoor use. The starter shall be across-the-line configuration, factory-mounted and fully pre-wired to the compressor motor(s) and control panel. A control power transformer shall be factory-installed and factory-wired to provide unit control power. Control panel shall be dead front construction for enhanced service technician safety. Power line connection type shall be standard with a terminal block.	
			7	Pumps: Chilled fluid circuit shall be rated for 150 psig (1034 kPa) working pressure. Proof of flow switch shall be factory installed the correct number of pipe diameters from any elbow and in the correct orientation. In addition, the flow switch shall be factory wired. A water strainer shall be factory provided and installed with a blow down valve to facilitate periodic cleaning of the strainer to prevent it from becoming clogged. One "primary" plus "one stand-by operation" pump shall be provided. The hydronic assembly shall be factory supplied electrical freeze protection to 0^0F. Water pipe extensions with insulation shall be factory installed from the evaporator to the edge of the unit. Each pump motor shall be installed with an adjustable frequency drive. Pump insulation shall be removed by latches for ease of access. All motors shall be High-E rated motors.	

Will Comply	Will Not Comply	N/A			Remarks for Not Complying
				DIVISION 23 - HVAC SYSTEMS (cont.) **Section 23 66 00 - Air Cooled Liquid Chillers**	
			8	Refrigeration Components: Each refrigerant circuit shall include a filter drier, electronic expansion valve with site glass, liquid line service valves and a complete operating charge of both refrigerant HFC-410A and compressor oil. Each refrigerant circuit shall include a discharge line service valve to allow the refrigerant to be isolated in the condenser.	
			9	Controls, Safeties and Diagnostics The microprocessor-based unit controller shall be factory-installed and factory-tested. The unit display shall provide the following data: Water and air temperatures, Refrigerant levels and temperatures, Flow switch status, and Compressor starts and run times The unit controller shall provide chilled water reset based on return water as an energy saving option. The unit shall shut down if one or more of the following safeties have been breached: Low evaporator refrigerant temperature and/or pressure, High condenser refrigerant pressure, Low oil flow, Motor current overload, High compressor discharge temperature, Electronic distribution faults: phase loss, phase imbalance, or phase reversal Unit shall be shipped with factory control and power wiring installed. Chilled Fluid Circuit -- with optional integrated evaporator water pump Chilled fluid circuit shall be rated for 150 psig (1034 kPa) working pressure. Proof of flow switch shall be factory installed the correct number of pipe diameters from any elbow and in the correct orientation. In addition, the flow switch shall be factory wired. A water strainer shall be factory provided and installed with a blowdown valve to facilitate periodic cleaning of the strainer to prevent it from becoming clogged. Building Control System Interface: The chiller manufacturer shall provide a communication interface that shall permit complete exchange of chiller data with any BAS system specified in Section 23 09 23 through the use of an BACnet translator. The BACnet translator shall allow the BAS system to issue commands to the chiller to control its operation, change set points, and report all data to the BAS system that is normally available to an integrated control system. The microcomputer control center shall also have the following points hardwired in conjunction with the BACnet Points: Remote chiller start/stop. Reset of chilled water temperature. Reset of current limit.	
			10	Acceptable manufacturer's: Carrier, Daikin, Johnson/York, and Trane.	

Will Comply	Will Not Comply	N/A			Remarks for Not Complying
				DIVISION 23 - HVAC SYSTEMS (cont.) **Section 23 71 19 - Thermal Ice Storage**	
			1	The thermal storage ice tank system shall be a closed circuit, provided by a single organization, including; modular ice storage tanks, glycol management system, heat transfer fluid, ice-inventory meter, glycol fluid filters/strainers, water treatment chemicals, and accessories as listed in the specifications herein. Each ice storage tank shall arrive at the job site factory assembled.	
			2	The thermal storage system equipment manufacturer must have supplied at least 5 systems of 800 ton-hours or more capacity within a radius of 150 miles of the job site, all of which have operated successfully for five years.	
			3	All storage vessels shall be of one module size to facilitate balancing and shall be filled with water as a freezing fluid, such that the ice tank heat exchanger is totally submerged. The ice tank heat exchanger, in all thermal storage tank modules, shall be piped in parallel and a chilled solution (ethylene glycol) shall be circulated through the tubes. In the charging mode of operation, sub cooled ethylene glycol solution shall cause ice to form and build on the tube surfaces. In the load mode of operation, the melting ice from around the tube surfaces shall cool the glycol solution.	
			4	The ice storage manufacturer shall supply an ice inventory-measuring device, which will indicate the amount of ice available at any time within an accuracy of +/- 5 percent. This inventory-measuring device shall also be equipped with an electric transducer capable of producing a 4 - 20 mA signal, which can interface with the building automation system. This device shall be provided for contractor installation. The meter shall provide a visual indicator that shall be 4 inches in diameter, shall be factory calibrated at 1–100%. The 4-20 mA signal shall also be factory adjusted to the same range. This device is for indication only, NOT FOR CONTROL OF ICE SYSTEM.	
			5	Suppliers shall provide information in accordance with the current ARI Guideline for Specifying the Thermal Performance of Cool Storage 2002 that proposed equipment will meet minimum performance specified. Each ICE tank shall have FACTORY RATED AND PUBLISHED charge and discharge performance curves that clearly indicate usable ton-hours of storage at the system design temperatures shown in the plans and specifications. Usable ton-hours shall be shown on these curves and shall be provided with the submittal package. Average charging ethylene glycol temperature (average over ice making hours) and final charging temperature must meet minimum scheduled performance as listed.	
			6	The ice tank shall consist of a seamless one-piece design manufactured with high-density rotationally molded corrosion resistant polyethylene with an average thickness of 3/8 inch. Seamless one-piece. Galvanized tanks or Rectangular tanks are not acceptable.	
			7	Manufacturer of ice tanks to provide replacement parts warranty for phase change fluid containment, liner or vessel, sight glass, insulation, corrosion, and structure of tank for TWENTY YEARS from date of shipment to jobsite. If containment cannot be repaired in the field during warranty period, manufacturer must provide a replacement tank.	
			8	Manufacturer of ice tanks must provide a factory direct service warranty, parts and labor, for ice tank heat exchanger integrity and ice inventory meter and/or ice thickness meter for FIVE YEARS from date of tank shipment to job site. Manufacturer of ice tanks shall decide to repair or replace the heat exchanger in order to get the tank back on line and in service. Owner must provide access for repairs, heat transfer fluid, and fluid disposal.	
			9	Acceptable Thermal Ice Storage Tank Manufacturer is Calmac, no substitutions.	

Will Comply	Will Not Comply	N/A			Remarks for Not Complying
				DIVISION 23 - HVAC SYSTEMS (cont.) **Section 23 73 00 - Packaged Air Handling Unit**	
			1	Sizes, types and performance as indicated on unit schedule. Each unit complete with factory furnished components shall be as shown on the plans. Each air handler unit shall be completely factory assembled, or partially assembled, tested and shipped in one piece or in sections for field assembly depending on size. All casings and access doors shall be of double wall construction. All components shall be assembled on a base rail or mounting legs of sufficient height to provide proper condensate drain trapping, provided with the unit, complete with lifting lugs to accept cable in chain hooks. All units shall have decals and tags to indicate caution areas and to aid unit service. Nameplates shall be fixed to the unit.	
			2	Cabinet, Casing and Frame: Full height, hinged access doors with stainless steel hinge and lever latching mechanism shall provide access to each cabinet section from both sides. Access doors shall provide gasketing for a positive seal. Doors shall open outward for negative pressure and inward for positive pressure applications, or have a double latching mechanism for safety. Unit shall be insulated with U.L. listed minimum 2" thick waterproof foam insulation. Insulation to have a minimum thermal resistance or "R-Value" of 13. Unit cabinet shall be designed to operate at total static pressure up to 6.0" w.g. positive or 4" w.g. negative, and all cabinet joints shall be fully gasketed. Exterior panels of all sections shall be constructed of 18 gauge or heavier galvanized steel. All sections shall include galvanized steel internal liners. Wall thickness shall be 2". Casing panel inner liners must not extend to the exterior of the unit or contact the exterior frame. A mid-span, no-through-metal, internal thermal break shall be provided for all unit casing panels.	
			3	Coil sections shall be blow thru or draw thru as scheduled or detailed on drawings and incorporate single or multiple coils. Coils shall be guaranteed to have no moisture carry-over. Coil row depth shall match that shown on the air handling unit schedule, except that the minimum row depth shall be that listed, or 8 rows, whichever is less. Maximum fin density shall be 130 fins per foot, regardless of the value scheduled.	
			4	Water coils shall be of the cartridge type and have threaded connections (direct expansion coil shall have sweat type connections) located on the same end. Coil headers, distributors and connections shall be completely enclosed in the unit casing. Vent and drain connections shall be provided on all water cooling coils. Coil supports shall be Type 304 stainless steel.	
			5	Chilled water coils shall have 1/2" or 5/8" O.D. copper tubes. Coils shall be circuited for minimum pressure drop. Coils shall be tested at 315 pounds air pressure under warm water and be guaranteed for 150 psig working pressures. Coils shall be guaranteed to produce no carryover.	
			6	Electric heating coils shall be of the slip in or flange type, using wire construction of 80% nickel and 20% chromium supported in ceramic bushings. The heating wire for each step shall be strung along the entire coil face to prevent stratification when operating at less than full capacity.	
			7	Solid State Control Relay (SCR) to be provided for infinitely variable power output from 0 to 100% in direct proportion to temperature requirements. Heaters in excess of 20 KW shall have a "vernier" control with an SCR relay and electronic step controller with a minimum of three steps of control. The SCR circuit shall have a KW rating larger than each of the other circuits. The SCR circuit shall be arranged to be first on and last off. When the temperature sensor calls for heat, the SCR circuit will begin to modulate from 0 to 100% capacity. When it reaches 100%, it will stay for one to two minutes. A signal is then sent to the electric step controller to bring in a fixed KW step. The SCR shall then fine tune the KW output. The reverse action shall take place on a fall in temperature. The SCR shall stay at zero output for one or two minutes and then a fixed step shall go off.	

Will Comply	Will Not Comply	N/A			Remarks for Not Complying
				DIVISION 23 - HVAC SYSTEMS (cont.) **Section 23 73 00 - Packaged Air Handling Unit**	
			8	A double wall condensate drain pan shall consist of an inner 18 gauge 304SS pan, an outer 18 gauge galvanized steel pan and minimum 5/8" thick rigid foam insulation between the two pans. Pan shall be non-trapping design sloped to the drain connection and guaranteed not to have standing water after shut-down. It shall extend beyond the leaving airside of the cooling coil and extend underneath the coil connections. The drain pan shall be thermally isolated from the unit casing. A threaded drain connection shall extend through the unit base. For stacked coils, an intermediate Type 304 stainless steel drain pan extending a minimum of 6" past shall be provided with drop tubes on each end, or a method to transfer condensate to the lower drain pan shall be provided.	
			9	Supply fans shall be double width, double inlet centrifugal type. All fans shall be statically and dynamically balanced for quiet operation. Forward curved fan wheel and housing shall be fabricated from painted cold rolled steel or continuous galvanized steel. Backward curved or Airfoil fan wheels shall be fabricated from aluminum, painted steel, or aluminum alloy with fan blades continuously welded to the back plate and end rim and shall operate in a continuous galvanized steel housing. Units shall have solid steel shafts mounted in heavy duty 200,000 hour greasable ball bearings. Lubrication lines for the fan bearings shall be extended to the drive side of the unit. The entire fan assembly shall be completely isolated from the unit bulkhead with vibration absorbing fan discharge seal and mounted on 2" deflection spring isolators for all units above 3,000 CFM capacity. For units 3,000 CFM and less, 1" deflection internal or external spring isolators may be provided.	
			10	Direct Drive Plenum Fans: Provide fan type as specified on the schedule. Fan shafts shall be solid steel, coated with a rust-inhibiting coating, and properly designed so that fan shaft does not pass through first critical speed as unit comes up to rated RPM. All fans shall be statically and dynamically tested by the manufacturer for vibration and alignment as an assembly at the operating RPM to meet design specifications. Fans controlled by adjustable frequency drives shall be statically and dynamically tested for vibration and alignment at speeds between 25% and 100% of design RPM. If fans are not factory-tested for vibration and alignment, the contractor shall be responsible for cost and labor associated with field balancing and certified vibration performance. Fan wheels shall be keyed to fan shafts to prevent slipping.	
			11	Direct Drive Plenum Fans: If more than one motor is provided in the air handling unit, provide one motor trip CT on each motor.	
			12	The filter section shall be capable of accepting 2"- 30% prefilters. They shall be supplied complete with galvanized steel filter racks as an integral part of the unit. Filters shall be accessible from both sides of the unit or as shown on the documents. The filter section shall be provided with filters and filter differential pressure gauge.	
			13	A return air plenum shall provide 100% return air capability. A duct collar shall accept return air ductwork return air connection as detailed on drawings.	
			14	Factory Built Plenum Section: Reinforced mill galvanized or primed steel with baked finish, minimum 18 ga. panels, gasketed joints between panels, 1" thick, 3 lbs. density glass fiber insulation with vapor barrier, access doors with safety latch handles. Suitable for 6.0" w.g. positive or 4" w.g. negative static. Field Built Plenums are NOT acceptable.	
			15	A discharge air plenum shall be provided for sound attenuation with outlet velocities as scheduled and will have 1" duct collar for a bottom or front supply air duct connection as detailed.	
			16	Acceptable air handling units Manufacturer's are Carrier, Daikin and Trane.	

Will Comply	Will Not Comply	N/A			Remarks for Not Complying
				DIVISION 23 - HVAC SYSTEMS (cont.) **Section 23 81 24 - Energy Recovery Air Handling Units**	
			1	The Energy Recovery system shall be shop manufactured and assembled by Munters / Des Champs Technologies, Inc. Arrangement of all units shall be as shown on the Drawings. Performance shall be rated in accordance with ARI testing procedures. All units shall be factory assembled, internally wired, and 100% run tested to check operation, fan and blower rotation and control sequence (if applicable) before leaving the factory.	
			2	Base Frame: The base of the package shall be an all-welded structural "C" channel steel frame with required tubular and angular cross-members as required to maintain floor rigidity and stiffness & act as isolator supports – all solid welded in place. The base shall be painted with one coat of a lead-free, rust-inhibiting, alkyd metal primer, followed by two coats corrosion and weather resistant 100% acrylic latex paint. The frame shall have sufficient cross members to support the system without bending or deforming the casing to maintain waterproof integrity and proper equipment alignment. The base shall also be constructed to minimize oil canning and deflection due to component loading. Four or more lifting lugs designed to work with clevises shall be an integral part of the structural frame and shall be welded using three-pass welds. Bolted or screwed base frame and floor assemblies are not acceptable due to their poor structural integrity and propensity to leak.	
			3	Unit casing shall be of the monocoque stressed skin design with 2-inch double-wall, watertight construction. Walls and roof shall have an 18-gauge galvannealed steel outer skin with a 22-gauge galvanized steel inner liner. 2-inch minimum, 1.5 pound density fiberglass insulation shall be secured between the inner and outer skins. The insulation shall be held between the inner and outer walls and shall not be exposed to any air streams. All roof and sidewall seams shall be positively sealed to prevent water and air leakage. Air leakage shall not exceed 1% at 1-1/2 times maximum unit operating pressure. All fastening hardware between wall panels shall be encapsulated within the wall for a clean exterior appearance and to minimize exterior wall panel penetration. Unit shall be constructed to limit frame and panel deflection to 1/200th of its span in any direction. Tubular frame or aluminum post type construction shall not be accepted due to excessive thermal bridging at panel joints, and poor weather seal characteristics.	
			4	Access Doors: Self-supporting hinged access doors shall be provided for inspection and maintenance of fan assemblies and filters. Access doors shall be gasketed around the perimeter with weather-resistant closed-cell neoprene gasket. The door shall be insulated the same as the unit casing, and double-wall constructed with full-length stainless steel piano-type hinges for rigidity and airtight enclosure. A minimum of two adjustable glass reinforced nylon handle-type door latches shall be furnished for each hinged door. Each door handle shall be provided with large nylon roller cam for ease of operation and superior gasket depression. Each hinged door shall include locking mechanism that requires the use of a tool to open for safety and security purposes prior to unit startup. Handles shall be operable from either side of the door. Doorframes shall be a minimum 16 gauge aluminized or 304L stainless steel, welded at the corners. Doors shall have adhesive-backed stickers applied to their exterior surfaces which indicate the unit contents that lie behind that door. All exterior doors shall be equipped with rain gutters. Doors shall be manufactured in such a way as to allow removal of interior components without disassembly of the wall panels.	

Will Comply	Will Not Comply	N/A			Remarks for Not Complying
				DIVISION 23 - HVAC SYSTEMS (cont.) **Section 23 81 24 - Energy Recovery Air Handling Units**	
			5	Floors shall have an upturned flange around the entire perimeter and around all interior chases to contain moisture within the unit. The entire floor and upturn flanges must be factory water tested and certified leak proof for a period of five years from the date of shipment. Multiple floor drains shall be provided to route moisture to either side or bottom 1-1/2 inch NPT drain connections (see the Drawings for drain locations) that are accessible from the exterior of the unit. The purpose of the drains shall be to remove any condensate that is created within the casing as a natural part of the recovery or dehumidification process. Drains shall be flush with the unit floor so as not to create a trip hazard. Each floor hole interface with the drain tube shall be circumferentially fillet welded to prevent water leakage under the unit floor. The use of sealants for this purpose shall not be acceptable. All drains and associated piping are to be fully welded and tested	
			6	Enthalpy Wheel Heat Exchanger - (Wheel Must Be ARI Rated and Currently Listed on ARI website)	
			7	The supply (and exhaust) air fan(s) shall be AMCA certified, Class I or II, heavy duty, centrifugal plenum (AF-SWDI) type with non-overloading wheel. Flexible duct connections shall be provided to isolate the fan from the cabinet housing as required. Bearing supports shall be constructed of structural steel members to prevent vibration and to rigidly support the fan shaft and bearings. Bearings shall be heavy-duty grease lubricated, self-aligning ball or roller pillow block type. Bearings shall be selected for a basic rating fatigue life (L-50) per AFBMA Standards of 200,000 hours at maximum operating speed for each pressure class and shall be rigidly mounted on welded structural steel members to prevent vibration. Turned, precision ground and polished steel shafts shall be sized so the first critical speed is at least 25% over the maximum operating speed for each pressure class.	
			8	Motor electrical connections are to be factory prewired to the unit control panel. Motor shall be mounted on adjustable base. Open Drip Proof (ODP) (supply air and exhaust air fans) type fan motors shall be furnished with efficiencies equal to or greater than those specified in the Energy Policy Act of 1992 (EPACT).	
			9	All dampers shall be of the low leakage airfoil blade type with blade edge and side seals. Dampers shall be constructed of extruded aluminum frames (6063T5) of not less than 2.03 mm thickness. Blades shall be of extruded aluminum profiles with blade gaskets of extruded EPDM. Frame seals shall be of extruded TPE. Gaskets shall be secured in an integral slot within aluminum extrusions.	
			10	Chilled water cooling coil shall be sized to provide cooling/moisture removal of the capacity indicated on the equipment schedule. Tube arrangement shall be staggered and heat transfer shall be counter-flow. Coils shall have brazed copper inlet and drainable outlet headers and iron connections. Supply and return connections shall be male pipe thread of the size scheduled. Both supply and return coil connections shall be located at the same end of the coil.	
			11	Air filters shall be two-inch-deep pleated type as standard, providing an average efficiency of 30 percent by ASHRAE standard 52-76 test method. Maximum face velocity shall be 500 feet per minute. Filters must be provided standard on all air entering sides of air-to-air heat exchangers.	
				Section 23 81 26 - Split System Air Conditioners	
			1	Provide an air to air electric condensing unit (outdoor unit) in combination with a direct expansion fan coil (indoor unit), fully piped, wired and operational. Condensing unit shall be designed, tested, and fully charged for use with R 410A refrigerant. Combination unit shall be designed certified by UL and ARI.	
			2	Acceptable Manufacturers are: Carrier, Lennox and Trane.	

Will Comply	Will Not Comply	N/A			Remarks for Not Complying
				DIVISION 23 - HVAC SYSTEMS (cont.) **Section 23 81 26 - Split System Air Conditioners**	
			3	Outdoor Cabinet shall be constructed of commercial grade galvanized steel, primed and painted to manufacturer's standard color. Access doors with neoprene gaskets shall be provided to allow access to coil, fan, motor and controls. Mounting legs shall be provided.	
			4	Outdoor Compressor shall be high efficiency hermetic reciprocating type or scroll type equipped with a crankcase heater, automatically reversible oil pump, internal high pressure protection, and internal vibration isolation. Compressor motor shall have both thermal and current sensitive overload protection.	
			5	Outdoor coil shall be constructed of copper tubing with mechanically bonded aluminum fins having all joints brazed, factory installed coil refrigerant metering device to be mounted on unit liquid service valve, with device internal components to be removable for cleaning or replacement. Coil to be protected by a vinyl coated grille.	
			6	Outdoor fan shall be propeller type, direct driven, balanced statically and dynamically, and arranged for vertical air discharge. Fan shall be weatherproofed and approved for outdoor use. Fan motor shall be factory lubricated and internally protected.	
			7	Controls shall provide compressor short cycle protection and shall prevent compressor restart for a minimum of five minutes after shutdown. Liquid line low pressure switch, suction line accumulator with positive oil return, pressure relief switch and a loss of pressure indicator shall be provided.	
			8	Outdoor unit shall be equipped with filter drier, schrader access valves, refrigerant check valves in the refrigerant line, hot gas piping connection and valving, and expansion devices with interconnecting tubing to provide proper refrigerant flow control.	
			9	Low refrigerant and high refrigerant cut outs to be arranged in lock out circuit for manual reset. Control wiring terminal board and 24 volt control circuit transformer to be provided. Terminal board shall be designed to match indoor unit terminal board and furnished complete with factory wiring from board to all internal components and accessory thermostat terminals for standardized point to point connectors.	
			10	Outdoor units with multiple compressors shall have independent refrigerant circuiting.	
			11	Coils shall have a flexible epoxy polymer coating uniformly applied to all coil surface areas without material bridging between fins. Coating process shall ensure complete coil encapsulation. Corrosion durability shall be confirmed through testing to no less than 3000 hours salt spray per ASTM B117-90.	
			12	Indoor cabinet shall be constructed of commercial grade galvanized steel, primed and painted to manufacturer's standard color, and insulated with fireproof, permanent, odorless glass fiber material. Access to be all components shall be provided with neoprene gasketed access panel(s).	
			13	Indoor coil shall be constructed of copper tubing with mechanically bonded aluminum fins having all joints brazed. Factory installed refrigerant metering device, refrigerant line fittings which permit mechanical connection on the liquid line and female sweat or mechanical connection on the gas line, and condensate pan with primary and auxiliary drain connections shall be provided. Unit shall also be equipped with hot gas reheat coil installed in the unit.	
			14	Indoor fan shall be forward curved, centrifugal type, driven by factory lubricated single speed, three phase fan motor complete with internal overload protection, and resiliently mounted. Fan shall have horizontal air discharge or vertical air discharge as shown on the Contract Documents.	
			15	Indoor unit shall be provided with factory installed electric heater for supplemental heating to mount in discharge air passage. Elements to be of heavy duty nichrome internally delta connected on three phase. Heater to have line break high limit controls.	

Will Comply	Will Not Comply	N/A			Remarks for Not Complying
				DIVISION 23 - HVAC SYSTEMS (cont.) **Section 23 81 26 - Split System Air Conditioners**	
			16	Certain units require multiple power connections for energy management purposes and shall be indicated on the schedules. Coordinate this requirement.	
			17	Unit shall be provided with 1 inch medium efficiency throwaway filters. Initial and one replacement set to be provided with unit. Filter retaining rack to be arranged for removal and replacement in space allotted.	
				Section 23 81 29 - Packaged 100% Outside Air Units, Split System	
			1	Indoor Unit shall be design certified by UL and ARI specifically for indoor installation, completely assembled on a rigid base for one piece rigging, wired and tested by the manufacturer before shipment. Acceptable Manufacturers are: Carrier, Munters and Trane.	
			2	Indoor Cabinet shall be constructed of a minimum of 16 gauge commercial grade galvanized steel, primed, and painted to manufacturer's standard color. Indoor air section shall be completely insulated with fireproof, permanent, odorless 3/4" thick engineered polymer foam insulation. Neoprene gasketed access doors shall provide access to all components. All fasteners shall be stainless steel.	
			3	Indoor Evaporator Dehumidifier Coil Fins: Fins shall be die-formed, copper and shall be damage resistant. Fin spacing shall be a maximum of 10 FPI (fins per inch). Coil shall be fabricated from seamless drawn copper. The tubes shall be hydraulically expanded into the fins to form a permanent metal-to-metal bond for maximum heat transfer and stability. The coil shall be a minimum of six (6) rows deep. Coils shall be leak tested with 420 psig nitrogen. After testing, coils shall be sealed.	
			4	Indoor Reheat Coil Fins: Fins shall be die-formed, copper and shall be damage resistant. Fin spacing shall be a maximum of 12 FPI (fins per inch). Coil shall be fabricated from seamless drawn copper. The tubes shall be hydraulically expanded into the fins to form a permanent metal-to-metal bond for maximum heat transfer and stability. The coil shall be a minimum of two (2) rows deep.	
			5	An internal electric heating coil shall be installed downstream from the hot gas reheat coil. The auxiliary heating coil shall be controlled by the systems controller. The binary control signal shall be a dry contact closure.	
			6	Compressors (7.5 to 30 HP): The compressors shall be a tandem pair, heavy-duty scroll type. The compressors shall be staged by a factory mounted sensor to deactivate one compressor when the load reaches the mid-range of the systems capacity. The compressor shall be equipped with high and low vibration isolated. The unit shall be provided with hot gas bypass for each system compressor. The use of semi-hermetic compressors is not acceptable.	
			7	Compressor (<6 HP): The compressor shall be heavy-duty scroll type, single compressor complete with start kit on single-phase motors. The compressor shall be equipped with low and high pressure safety switches, with internal protection from overheating. The compressor shall be externally vibration isolated. The unit shall be provided with hot has bypass for each system compressor. The use of semi-hermetic compressors is not acceptable.	
			8	Receiver: The unit shall be provided with a refrigerant receiver. The receiver shall assist the unit in operating at the highest efficiency over the full range of load conditions. Units 7.5 HP and larger shall have a full capacity receiver with service valves.	

Will Comply	Will Not Comply	N/A			Remarks for Not Complying
				DIVISION 23 - HVAC SYSTEMS (cont.) **Section 23 81 29 - Packaged 100% Outside Air Units, Split System**	
			9	The electrical control panel shall be easily accessible on one side so that all service can be performed from the side of the unit. It shall be of adequate size so as to house all electrical controls and devices. The unit shall be provided with single point power connection factory wired to the power connection lug set. The electrical controls shall include low voltage transformers to supply 24 VDC control power, clearly labeled high and low voltage terminal strips, high and low pressure control (with manual reset of the high pressure cutout and automatic reset of low pressure cutout), and an anti-short cycling timer to protect against compressor cycling. Unit shall include factory-mounted temperature and humidity sensors in the filter section, pre-wired to controller in panel for actuation of compressor in ambient temperatures above 55F dewpoint. A factory-provided, field-installed discharge temperature sensor provides the feedback to the controller to automatically control the leaving air temperature to the desired set point. An adjustable potentiometer shall allow easy field changes in LAT set point.	
			10	Condensate Drain Pan shall be 20-gauge stainless steel, sloped, and positioned under the dehumidifier coil. It shall be silver-solder welded and securely attached to the evaporator end plates to avoid shifting. The drain pan shall be fitted with a minimum 1" MPT non-corrosive plastic drain connection. The drain pain shall meet all the requirements of ASHRAE 62.	
			11	The blower housing assembly shall be made of galvanized steel and mounted on permanently lubricated sealed ball bearings. The blower assembly shall be forward curved, centrifugal; it shall be dynamically and statically balanced. The blower housing shall be vibration isolated. The driver pulley and the blower pulley shall be made of cast iron. The motor sheave shall be a variable pitch type to allow for field adjustment of CFM and external static pressure, and shall be dynamically and statically balanced. The drive overload service factor shall be 1.4 minimum. The motor shall be ODP (indoor) or TEFC (outdoor), class B insulated, continuous duty, 40C ambient, three-phase overloads. The motor shall be UL listed.	
			12	Air Filters: Filters shall consist of 4" disposable pleated, 25 to 30% average atmospheric efficiency.	
			13	Outdoor Condenser Cabinets shall be constructed of heavy gauge galvanized steel. Sides shall be one piece construction. Units shall be provided with lifting lugs for ease of installation.	
			14	Condenser coils shall be of copper tubing in a staggered design. Tubes shall be mechanically expanded into full collared plate type aluminum fins. Coils shall be factory leak tested and sealed with caps.	
			15	Fan motors shall be heavy duty PSC or three phase depending on voltage scheduled with permanently lubricated ball bearings and built in overload protection. All motors shall be factory wired with leads terminating in a weatherproof junction box located on the outside of the unit cabinet.	
			16	Fan diameter shall not exceed 30 inches. All units shall have dynamically balanced fans with aluminum blades and painted steel hubs. Guards shall be heavy gauge, close meshed steel wire with vinyl coating. Guards shall be contoured for maximum rigidity.	
				Section 23 81 43 - Ductless Split System Air Conditioners	
			1	Air to Air Packaged Heat Pumps, Split System (Carrier or Trane ONLY): Provide an air to air electric heat pump (outdoor unit) in combination with a direct expansion fan coil heat pump (indoor unit), fully piped, wired and operational. Heat pump shall be designed, tested, and fully charged for use with R-410A refrigerant. Heat pump shall be designed certified by UL and ARI.	
			2	All openings made in walls or the roof the piping/electrical shall be patched and sealed completely, using materials of similar to existing type construction, to the Owner's satisfaction.	

Will Comply	Will Not Comply	N/A			Remarks for Not Complying
				DIVISION 23 - HVAC SYSTEMS (cont.) **Section 23 81 43 - Ductless Split System Air Conditioners**	
			3	All refrigerant piping shall follow refrigerant piping techniques.	
			4	Condensate traps shall be minimum 4 inches deep and shall be field installed. Install plug in condensate drain on opposite side of unit from traps. Condensate drain connection shall be not less than 3/4".	
			5	All wiring shall comply with applicable local and national codes. Final connections shall be made with liquid -tight type electrical conduit for ease in removal.	
			6	Thermostat and sub-base for wall mounting shall be as detailed on plans.	
			7	Maintain necessary access space for filter change and normal maintenance. Piping and electrical connections shall be so located as to eliminate any interference with removal and replacement of filter.	
			8	Maintain space clearances around heat pump per manufacturer's recommendation.	
				Section 23 82 16 - Coils	
			1	Electric Heating Coils: Shall be of the slip-in or flange type using wire construction of 80% nickel and 20% chromium supported in ceramic bushings. Casings shall be shall be constructed of not lighter than 22 gauge galvanized steel with galvanized steel support on 4 inch centers, gusseted and spot welded. Solid state control relay (SCR) to be provided for infinitely variable power output from 0 to 100% in direct proportion to temperature requirements. Heaters in excess of 20 KW shall have a venier control with an SCR relay and electronic step controller with a minimum of three steps of control.	
				Section 23 82 19 - Fan Coil Units	
			1	Horizontal Cabinet Fan Coil Unit with/without Electric Heat: Shall be minimum 18 gauge galvanized steel, baked finish, double deflection discharge grille, stamped back or bottom return grille, ½" 1-1/2 lb. density glass fiber insulation with erosion proof coating. Centrifugal fan, forward curved or backward inclined. Electric Heat shall be sheath, strip or coil type with heating protected surface.	
			2	Each coil to have valve package including combination shut-off valve and strainer, motorized 2 position electric control valve and combination shut-off and flow control valve as specified in Section 23 05 23. Valve package to include all necessary piping and union's required for service. Motor voltage to be as scheduled.	
			3	A unit having a cooling coil with electric heat shall be capable of providing sequenced heating and cooling.	
			4	Sub-base with fan switch having off-low-med-hi speeds and sequenced heating-cooling thermostat for a two pipe system plus electric heat control.	
			5	Completely coordinated control and wiring package.	

Will Comply	Will Not Comply	N/A			Remarks for Not Complying
				DIVISION 26 - ELECTRICAL **26 01 00 Operation and Maintenance Manuals**	
			1	The specifications shall require a thorough submittal of "operation and maintenance manuals" in binder(s) suitably sized, of all electrical power, lighting and systems equipment included in project. Provide one hard copy binder and one copy on CD.	
				26 01 04 Continuity of Service	
			1	Work shall be so planned and executed as to provide reasonably continuous service of existing systems, utilities, and communication network throughout the construction period. Where necessary to disrupt services for short periods of time, these outages shall be made at SCPS's convenience.	
			2	Shutdowns of electrical systems shall be bid as being done at other than normal working hours.	
			3	Give ten working days' notice to set up any shutdown.	
			4	Existing Services: Active services encountered in work shall be protected and supported. If unanticipated existing services are encountered which require relocation, the Architect shall be notified via RFI. Inactive services encountered shall be removed or deactivated as shown or directed by the SCPS's Project Manager. All cost for repair of damages to active services shall be paid by the Contractor causing the damage.	
			5	This Contractor shall notify the SCPS's Project Manager and all local utility authorities at least five working days before excavating in an area.	
				26 01 05 Investigation of Existing Electrical Systems	
			1	The specifications shall require a thorough "pre-existing conditions check" of all equipment prior to mobilization with a written report to be provided to the Owner of deficiencies noted. The Contractor shall be responsible for all subsequent deficiencies not noted in the report.	
			2	The Electrical Engineer shall contact the local utility company to obtain all relative information, obtain available fault current, verify existing maximum demand (for the past 12 months), coordinate service entrance requirements including voltage, load and the location of power company transformer and primary power lines.	
			3	The Electrical Engineer shall specify proper disposal criteria for the contractor to remove and dispose of mercury containing lamps and PCB ballasts.	
				26 05 00 Common Work Results	
			1	The Electrical Engineer shall research, survey, inform the Project Manager and submit the application for any and all available power company rebates that are applicable to the project. HVAC applicable rebates shall be submitted by the Mechanical Engineer.	
			2	All electrical power and systems riser diagrams shall clearly show all raceway runs between all terminal cabinets and/or panel locations.	
			3	Installation point-to-point drawings shall be included with the project record drawings/documents (as-builts).	
			4	Whenever possible, wall or column mounted receptacles and/or termination junction boxes for kitchen equipment shall be used in lieu of floor mounted pedestals, boxes or under slab devices.	
			5	Where ground fault protection is required for devices or circuits, individual ground fault receptacles shall be used in lieu of either ground fault breakers or feed through ground fault devices.	

Will Comply	Will Not Comply	N/A			Remarks for Not Complying
				DIVISION 26 - ELECTRICAL (cont.) **26 05 00 Common Work Results**	
			6	All electrical distribution panels shall be located in dedicated electrical rooms.	
			7	Multi-wire circuits shall not be utilized. Each circuit shall have a dedicated neutral.	
			8	Shunt trip systems (break glass operators) which are required on the exterior of the building for use by the fire department shall be included at 6 ft. 6 in. which makes them less susceptible to vandalism and mischievous activation.	
			9	A minimum of two double duplex receptacles shall be installed on each of the three walls to power the MDF room as well as one double duplex installed on each equipment rack. All receptacles shall be double duplex, NEMA 5-20R, 120 VAC and shall have their own 20 amp circuit breaker from the primary power source. Install one NEMA L6-30R, 208 VAC 30 amp receptacle in MDF room. The NEMA L6-30R receptacle will be located behind the racks in the MDF room, and no more than 6' from center rack.	
			10	All rooftop HVAC equipment shall have an attached duplex 120 VAC, 20 Amp exterior grade convenience receptacle.	
			11	Provide appropriate number of spare lamps, fuses, etc. commensurate with scope of work.	
			12	No splices shall be made in underground/flush in-grade pull boxes without approval by SCPS Project Manager.	
			13	Main service and distribution panels shall have minimum 20% spare capacity with 10% spare breakers. Spares are for Owner's use.	
			14	Engineer shall show load calculation and panel schedules on plans.	
			15	Equipment shall be limited to Square D, General Electric, Siemens, Eaton/Cutler Hammer.	
			16	Panel directories shall be typed for new installations and for each panel where circuits are added to existing panels.	
			17	All sources of strong electro-magnetic fields shall be located to minimize exposure in normally occupied space.	
			18	Provide complete, safe, efficient, cost effective, operational systems for lighting, power, security, fire safety and communications.	
			19	The General Contractor shall provide and install panic hardware on all electrical room doors where the electrical room houses equipment rated 800 amps or more per NEC Article 110.26. All electrical room doors shall open in the direction of egress.	
			20	All power and electronic systems shall be designed and specified to have spare capacity to accommodate no less than five portables at the campus, in addition to the project facility requirements. The portable spare conduit/service for power shall be one 3" and shall originate at the nearest 480VAC service panel and terminate, cap and be concrete marked in the area designated for future portables.	
			21	At secondary schools, power shall be provided for electric hand dryers.	

Will Comply	Will Not Comply	N/A			Remarks for Not Complying
				DIVISION 26 - ELECTRICAL (cont.) **26 05 03 Equipment Wiring System**	
			1	Power sources for kitchen equipment that have high ampere loads (stack ovens, tilt skillets, steamers, equipment usually found under the fire protected hood) shall be 480 volt 3 phase. Other smaller type devices and serving line areas shall be 120/208 volts.	
				26 05 19 Building Wire and Cable	
			1	All conductors and bus bars shall be copper.	
			2	All conductors shall be copper, heat and moisture resistant, rated 600 volt thermal plastic insulated as follows: Conductors #10 AWG or #12 AWG shall be 600 volt Type THWN/THHN unless noted otherwise, rated 90 degrees C. dry, 75 degrees C. wet. Conductors #8 AWG and larger shall be 600 volt Type THWN-2/THHN unless noted otherwise, rated 90 degrees C wet or dry.	
			3	Where conductors and insulation rating shown on the drawings exceed above construction standards, the type of conductor and insulation rating on the drawings shall prevail.	
			4	Aluminum conductors shall not be specified.	
			5	Direct buried cable is prohibited.	
			6	All conductors shall be stranded.	
			7	All conductors shall be UL labeled.	
			8	Wire size ampacity shall equal or exceed its overload protective device. Where wire sizes shown on the drawings are greater than the apparent ampacity requirements, the size shown shall prevail to compensate for voltage drop.	
			9	Minimum conductor size shall be #12 except #14 may be used only for control wiring or where otherwise specifically shown.	
			10	Conduit systems shall be clear and clean before pulling wire. Branch circuit conductors shall be pulled without resorting to levers or heavy pulling devices.	
			11	Phase Conductors regardless of size, shall have color coded insulation identified as follows: Brown, orange, yellow for 277/480 volts. Black, red, blue for 120/208 volts. Re-identification of conductors, regardless of size with colored phase tape, is not acceptable.	
			12	All neutral conductors regardless of size, shall have color coded insulation as follows: White for 120/208 volt. Gray for 277/480 volt. Re-identification of conductors, regardless of size with colored phase tape is not acceptable.	
			13	All grounding and equipment grounding conductors, regardless of size, shall have factory green color coded insulation and connected with approved UL connectors and terminated to boxes, devices equipment, etc. to grounding bars in panels. Reidentification of conductors, regardless of size with colored phase tape, is not acceptable.	
			14	Isolated grounding conductors in general shall not be used. Where required by Engineer of Record, isolated grounding conductor, regardless of size, shall have green insulation with yellow tracer and connected with approved UL connectors and terminated to devices equipment, etc. to isolated grounding bars in panels. Reidentification of conductors, regardless of size with color phase tape, is not acceptable.	

Will Comply	Will Not Comply	N/A			Remarks for Not Complying
				DIVISION 26 – ELECTRICAL (cont.) **26 05 19 Building Wire and Cable**	
			15	MC Cable is permitted for branch wiring within metal stud walls. Homeruns shall be 3/4" conduit to a junction box located not more than 10 feet from the first device on a circuit. MC Cable shall not be used to feed surface raceways. Support with clips suitable/listed for application.	
				26 05 26 Grounding and Bonding	
			1	All raceways shall have a green insulated copper equipment grounding conductor.	
			2	Provide ground bus on secondary of all transformers that feed electronic equipment. This is to provide ground point for local electronic equipment grounds and local electronic system cable surge suppressor ground connections. Connect ground bus to transformer ground/neutral with appropriately sized ground wire.	
			3	All main service grounds shall be designed and specified to have a maximum measured earth ground resistance of 5 ohms.	
			4	Ground rods. Copperweld. Each ground rod shall consist of a minimum of 30 feet of 5/8" ground rods coupled together. Three ground rods shall be used to ground each building's electrical service installed in a triangular formation at a minimum of 30' apart.	
			5	Ground rods. Provide grounding well with cover at each rod location. Install grounding well top flush with finished grade.	
			6	Ground rod connections shown above ground: Exothermic welding or Clamps UL listed for use for above ground.	
			7	Ground rod connections below ground: Exothermic welding.	
			8	Wiring devices shall be connected with grounding jumper from grounding pole on device to grounding conductor.	
			9	Grounding conductors shall have green 600 volt factory insulation and be connected with approved connectors and terminations to boxes, devices equipment, etc. to ground bars in panels.	
			10	Conduit systems and associated fittings and terminations shall be mechanically tight to provide a continuous path to ground.	
			11	Main services shall be grounded to metal water service entrance, building steel, concrete encased electrode, as well as driven ground rods and as required by the NEC.	
			12	Ground all equipment by bonding all metallic conduit to equipment enclosures with locknuts cutting through paint on enclosure.	
			13	Bond conduits entering MAIN DISTRIBUTION PANEL with grounding wire connecting the grounding type bushings to equipment ground bar.	
			14	In addition to using conduit system for grounding, provide an insulated green ground wire in all conduits.	
			15	Bond motor frames to equipment grounding system with an independent green wire.	

Will Comply	Will Not Comply	N/A			Remarks for Not Complying
				DIVISION 26 – ELECTRICAL (cont.) **26 05 26 Grounding and Bonding**	
			16	Equipment ground fault circuit interrupters shall be furnished where required.	
			17	Conduits crossing building expansion joints shall have provisions to maintain grounding continuity.	
			18	Interconnection of service grounding, system, neutral and equipment grounding conductors shall be made within the MAIN DISTRIBUTION PANEL.	
			19	Ground secondary neutrals in low voltage service equipment as required by NEC.	
			20	Equipment shall have grounding conductor within branch circuit conduit and be grounded to cabinet of the panelboard by an uninsulated ground bus.	
			21	Do not use neutral as equipment ground.	
			22	Equipment grounds and the identified neutral shall not be electrically interconnected on building side of service ground.	
			23	Provide a detailed grounding plan showing all ground electrodes, grounding electrode conductors, bonding to other grounded systems, grounding for separately derived systems and ground connections for communication equipment.	
			24	An equipment-grounding conductor shall be installed in every feeder and branch circuit conduit and raceway.	
			25	Equipment grounding conductors installed in metal conduits or raceways are bonded to that conduit or raceway at both ends of the run to minimize impedance to ground.	
			26	Continuity of a grounded conductor shall not depend on a connection to a device, enclosure, raceway or cable armor per NEC 200.2(B).	
				26 05 29 Hangers and Supports	
			1	Conduits, cable trays, boxes and fittings that are hung from the building structure shall be supported with metal supports.	
			2	No electrical item shall be hung from pipes or ductwork	
			3	Generally, all boxes and structural support systems installed in spaces with no ceilings will be painted-in with the space.	
			4	Metal supports shall be electro-plated zinc for interior applications. Metal supports shall be hot dipped galvanized or stainless steel for exterior applications.	
			5	Do not use wire ties to support conduit or cables.	

Will Comply	Will Not Comply	N/A			Remarks for Not Complying
				DIVISION 26 – ELECTRICAL (cont.) **26 05 29 Hangers and Supports**	
			6	All components shall be independently supported from structure.	
			7	Ceiling support wires or similar added wires shall not be utilized to support conduits, cables, or boxes.	
				26 05 33 Conduit	
			1	All empty/spare conduits shall have pull strings with labeling tags at each end and sealed.	
			2	Minimum conduit size is 3/4 inch for homeruns, underground branches, and branches in masonry or concrete construction. 1/2 inch conduit may be utilized for branches above accessible ceilings and for branches in metal stud walls. Where conduit sizes shown on the drawings exceed construction standard, the size on the drawings shall prevail.	
			3	MC Cable is permitted for branch wiring within metal stud walls. Homeruns shall be 3/4 inch conduit to a junction box located not more than 10 feet from the first device on a circuit. MC Cable shall not be used to feed surface raceways or for any installation where MC Cable is exposed after installation. Support with clips suitable/listed for application.	
			4	Exposed conduit bundles through floors, feeding panels, etc. shall have a 4" high "housekeeping pad" specified.	
			5	Use galvanized rigid conduit for exterior exposed locations. EMT may be utilized for exterior application above 8'-0" that are protected from sunlight and weather (i.e., under canopies.)	
			6	Expansion fittings shall be provided in exposed conduit runs over 100', at building expansion joints and in conduit runs between buildings.	
			7	Underground conduit shall be a minimum of 24" below grade.	
			8	All trenching at existing facilities shall be done by hand unless approved as otherwise by SCPS.	
			9	Conduit shall not be run on roofs without approval by SCPS School Project Manager.	
			10	EMT Conduit. Allowed only where allowed by and installed in accordance with NEC.	
			11	PVC type 40 (schedule 40) rigid conduit shall conform to ANSI, NEMA specifications and each length UL labeled. PVC conduit use is limited to in or under concrete slabs on grade and underground. PVC shall not be turned up through concrete exposed or penetrate grade. For exposed penetration of slab or penetration of grade, use rigid galvanized conduit painted with UL approved asphalt paint. Where penetrating a floor in a location concealed in a wall and acceptable by applicable codes, rigid nonmetallic conduit may be used up to the first outlet box, provided outlet box is at a maximum height of 48" above finished floor. Shall not be exposed indoors.	
			12	Flexible Metal Conduit (Greenfield type) Galvanized. Application: Use limited to dry locations: Connection to lighting fixtures not over 6 feet in length. Narrow movable partitions where other raceways are not practical, when approved by the SCPS's Project Manager. Motors. Air handlers. Exhaust Fans. Elevator Equipment.	

Will Comply	Will Not Comply	N/A			Remarks for Not Complying
				DIVISION 26 – ELECTRICAL (cont.) **26 05 33 Conduit**	
			13	Plastic Jacketed, Liquid-Tight, Flexible Metal Conduit Galvanized. Application: Use limited to: Connection to motors or controls on dynamic equipment and transformers. All motor connections shall be water and dust tight type with fittings approved for wet locations (maximum length 6 feet).	
			14	Surface Raceways: Surface Metal Raceway with Snap on covers with prime gray finish (enamel finish coat to match room finishes in remodel areas). Application: Permitted only when specifically shown on the drawings. Surface EMT conduit may be used for exposed applications with approval of SCPS's Project Manager.	
			15	All connections to movable, vibrating, kitchen, outdoors equipment, and in damp locations shall be liquid tight flexible steel conduit. Final motor connections in dry areas shall be made in flexible metal galvanized "Greenfield" conduit.	
			16	All conduits shall have an equipment grounding conductor sized in accordance with NEC Table 250.122.	
			17	Maintain 6" from conduits to paralleled hot water piping and 4" from cross piping.	
			18	Secure feeder conduits to basic structural elements with galvanized hangers and clamps.	
			19	Use of trapeze type hangers is encouraged for multiple conduits where space will permit.	
			20	Conduit may not be attached to suspension grid.	
			21	Galvanized metal clamps and screws may be used for attaching and supporting branch circuit conduits.	
			22	Nonmetallic fasteners shall not be used except plastic inserts may be used in concrete and masonry for small conduits.	
			23	Vertical conduits shall be supported at each floor by suitable clamps.	
			24	During construction, temporarily cap open ends of conduits with suitable caps. Wadded up paper, cups, etc., are not acceptable caps. Caution other trades to take special care of conduit runs in concrete slabs during pouring.	
			25	Empty conduit installed for future use or for future systems shall have a 210 pound or greater tensile strength polyline pull line provided for use in pulling wires.	
			26	Provide a tag at each end of an empty conduit to identify location of other end of conduit.	
			27	Pull mandrel or large swab through conduit to assure freedom from debris before pulling wires. Use pulling lubricants sparingly.	
			28	Conduit in exposed locations shall exit concrete slab with rigid galvanized elbows.	
			29	Vertical conduits through floor slabs shall have penetrations suitably firestopped using a UL Listed Through-Penetration Firestop System.	

Will Comply	Will Not Comply	N/A			Remarks for Not Complying
				DIVISION 26 – ELECTRICAL (cont.) **26 05 33 Conduit**	
			30	Water seal and make moisture tight all conduits entering from outside the building.	
			31	Power actuated fasteners of any type are prohibited. This includes anchors which are driven into place by any device which produces an impact force by use of a powder charge, compressed air, gas or any other propellant.	
			32	Provide six 1" diameter spare conduits for each flush mounted branch circuit panelboard. Extend from top of panelboard to above the ceiling for future use.	
			33	Contractor shall record carefully on a set of "as-built" prints, the exact location of all feeder conduits.	
			34	Do not use wire ties to support conduit.	
			35	All components shall be independently supported.	
			36	No conduit shall be used to support another.	
			37	Conduit shall be run concealed in all finished areas of new construction and elsewhere unless specifically indicated or upon specified permission by SCPS's Project Manager. Where run, exposed conduit shall be run parallel building lines.	
			38	Fittings and workmanship shall assure electrical continuity.	
			39	All conduit systems in poured concrete shall be concrete tight.	
			40	Rigid Conduit: Conduit ends shall be threaded. Fittings shall be steel or malleable iron. Insulated bushings shall be provided at all conduit terminations. Insulated throat ground bushings shall be provided when installation does not facilitate grounding conduit to a grounded metal enclosure via inner/outer locknut pair.	
			41	EMT: Fittings shall be set screw type for interior applications.	
			42	Flexible Conduit: Fittings shall be "squeeze" type, non-insulated.	
			43	Liquid Tight Conduit: Fittings shall be steel or malleable iron.	
			44	PVC runs over 150' in length shall utilize rigid steel 90 degree elbows at each riser and at each change in direction. Elbows shall be coated with black mastic or PVC coating.	
			45	Power conduit shall be sized at the discretion of the Electrical Engineer, except 3/4" conduit shall be minimum size for all branch circuit homeruns and feeder homeruns, and 3/4" conduit shall be minimum size for all underground raceways. Fixture whips may be 3/8" factory whips.	

Will Comply	Will Not Comply	N/A			Remarks for Not Complying
				DIVISION 26 – ELECTRICAL (cont.) **26 05 33 Conduit**	
			46	All empty raceways shall be equipped with continuous pull strings and end marking tag (showing opposite destination, building and closet number at each end). Exterior conduits shall have a concrete marker at grade and a suitable galvanized pull wire provided. Where an exterior empty conduit terminates within energized electrical equipment, a pull string shall be provided in lieu of galvanized pull wire.	
			47	Any exposed exterior conduit up to 8'-0" from grade or finished floor elevation shall be galvanized rigid metal type.	
			48	Exterior conduit shall have metal compression fittings (EMT) or thread type fittings (rigid) specified.	
			49	All exterior underground pull boxes shall be rated for vehicular traffic with appropriate type covers having clear identification of service within box.	
				26 05 34 Outlet Boxes	
			1	Blank plates in finished areas shall be brushed 302 stainless steel.	
			2	Back-to-back and through-the-wall boxes are not acceptable. When boxes share the same partition, they shall be offset a minimum of 12" for sound attenuation or as required for fire rating.	
			3	Boxes below suspended ceilings shall be "readily accessible" per NEC. No removal of equipment or furnishings shall be necessary for access.	
			4	Boxes above suspended ceilings shall be "accessible" per NEC. They must be accessible from below or side, and the access opening may not be less than 18 inches from a duct or structural component (excluding the ceiling grid). Junction boxes located above ceiling shall be installed facing down and shall be accessible after installation.	
			5	Do not recess boxes deeper than 5 inches into a wall (finished/furred out or not). Do not install multiple extension rings on one box. Do not install extension rings that will limit access to the back of the box, except for a trim ring. Boxes shall be sized so extension rings are not needed.	
			6	Unless indicated otherwise, communication boxes shall be 4-11/16" x 4-11/16" x 2-1/8".	
			7	Boxes for exposed or exterior work are to be cast aluminum with threaded hubs.	
			8	Provide water tight boxes, slip expansions and bonding jumpers where dictated by construction conditions.	
			9	Terminations at boxes shall be secure by locknuts or approved bushings.	
			10	Work shall be so planned as to minimize the number of offsets and outlet boxes. Coordinate activity in advance to avoid interference with other trades. Provide access to all outlet boxes. Boxes not otherwise accessible in ceilings and walls shall be made accessible by installation of 18" x 18" hinged door access panel equal to Milcor Type. Prime painted for new work.	
			11	Outlet boxes buried under finished grade level shall not be acceptable.	

Will Comply	Will Not Comply	N/A			Remarks for Not Complying
				DIVISION 26 – ELECTRICAL (cont.) **26 05 34 Outlet Boxes**	
			12	Surface outlet boxes shall be supported independently of conduit.	
				26 05 36 Pull and Junction Boxes	
			1	All exterior flush grade boxes shall be rated for vehicular traffic with appropriate type covers having clear identification of the service in the box.	
			2	No splices shall be made in any flush grade box.	
			3	Work shall be so planned as to minimize the number of offsets and junction boxes.	
			4	Provide access to all junction and pull boxes.	
			5	Boxes not otherwise accessible in ceilings and walls shall be made accessible by installation of appropriate sized access panel with minimum of 18" x 18" hinged door access panel equal to Milcor Type. Prime painted for new work.	
			6	Pull boxes buried under finished grade level shall not be acceptable.	
			7	Surface outlet boxes and pull boxes shall be supported independently of conduit.	
			8	Pull boxes shall be provided every 300 feet for all feeder conduits and systems conduits.	
				26 05 53 Identification for Electrical Systems	
			1	The conduit systems and junction boxes in non-public or concealed spaces shall be color coded as follows: (Paint bands shall be 4" in length spaced at 20' intervals.) Color Code for Junction Boxes Krylon Paint Numbers: Fire Alarm = Popsicle Orange K02410; Normal Power 277/480 Volt = Leather Brown K02501; Normal Power 120/208 Volt = Glossy Black K01601; Fiber Optics = Plum Purple K01929; Sound System = Daisy Yellow K01813; Intercom = True Blue K01910; Computer/Data = Gold K01701; TV = Glossy White K01501; BAS = Cameo White K04129; Security/CCTV = John Deere Green K01817; Telephone = Clover Green K02012; Grounding = Fluorescent Green K03106.	
			2	Electric panels are to have typewritten directories showing room numbers for lights, receptacles and hard wired devices complete, including all NEC requirements.	
			3	Electric panel identifiers shall include the number of the building in which they are located.	
			4	The following list shall have an engraved laminated plastic label attached with glue or screws with the unit identifier in 1" letters and voltage rating in 1/2" letters and where the unit is fed from (electrical panels, disconnects, starters, time clocks, transformer, motors, water heaters, variable frequency drives, and switchgear.)	
			5	Embossed plastic tape labels are not to be used.	

Will Comply	Will Not Comply	N/A			Remarks for Not Complying
				DIVISION 26 – ELECTRICAL (cont.) **26 05 34 Outlet Boxes**	
			6	Panels shall have "as built" typewritten directories.	
			7	Provide all labels, nameplates, signs, etc., as required by NEC.	
				26 05 73 Power System Study	
			1	The switchgear manufacturer shall provide a Breaker Coordination Study to determine breaker trip settings based on equipment installed. Study shall be included in the O & M Manuals and also provided to the Electrical Engineer.	
			2	Provide a list of overcurrent relay settings, ground fault relay settings and settings for adjustable circuit breakers. Relays are to be tested and the settings verified. Responsibility for detailed operational parameters and protection rests with the design professional and shall have manufacturer's acceptance.	
				26 08 13 Tests and Performance Verification	
			1	Provide requirements in specifications for testing and submittal of results of testing.	
			2	All wires in conduit that are shorted or unintentionally grounded shall be replaced.	
			3	Insulation resistance of all feeder conductors and all conductors, AWG #1 and larger shall be tested. This is to include all new conductors and/or all existing conductors that are connected and/or extended. Each conductor shall have its insulation resistance tested after the installation is completed and all splices, taps, and connections are made, except connection to source and point of final termination at distribution or utilization equipment. Insulation resistance of conductors that are to operate at 600 volts or less shall be tested by using AVO Biddle (or accepted equal) Megger at not less than 1000 volts dc. Resistance shall be measured from conductor to conduit (ground.) Testing methodology shall conform to short-time or spot-reading procedural recommendations of AVO Biddle Instruments for specific megger being used. Acceptable insulation resistance of conductors rated at 600 volts shall not be less than one (1) megom. Conductors that do not satisfy test requirements above shall be removed, replaced, and testing repeated on new cable, at no additional costs to SCPS. All tests shall be performed by licensed electrical trained in the use of test instruments. Contractor shall furnish all instruments and personnel required for tests, shall tabulate readings observed and submit five (5) copies to Engineer for acceptance. Test shall be witnessed by SCPS's representative and engineer (if so desired.) Final acceptance data is to be submitted in O & M Manual. Test reports shall identify each feeder conductor tested, date, time, and result of test, weather conditions and range, test voltage and serial number of the megger instrument used. Any conductor or splice that is found defective shall be promptly removed and replaced and additional test shall be performed.	
			4	Take readings of voltage and amperage at building main disconnect switch and at main for each panel, at primary and secondary side of each transformer and at the end of the longest branch circuit at each panel. The above readings shall be taken (1) "no load" conditions and (2) "full load" conditions with all equipment using electricity. Tabulate readings and submit five (5) copies to the Engineer for acceptance. Final accepted data is to be submitted in O & M manual.	
			5	Motors: Test run each motor via motor's control unit in both manual mode and automatic mode. Verify proper operation, voltage and rotation.	
			6	Grounding: Test each raceway for raceway continuity.	

Will Comply	Will Not Comply	N/A			Remarks for Not Complying
				DIVISION 26 – ELECTRICAL (cont.) **26 08 13 Tests and Performance Verification**	
			7	Grounding: Test each grounding system used in the project.	
			8	Grounding: Submit testing data for each and every grounding system in the project, including but not limited to: each ground rod installation, each water pipe and ground installation (test water pipe to ground and test water pipe to building service equipment) and each building steel ground connection (test building steel to ground and test building steel to building service equipment.)	
			9	Grounding: Grounding resistance shall be as called for in Section Grounding and Bonding.	
			10	Grounding: Testing shall be three point method in accordance with IEEE recommended practice.	
			11	Ground Fault System: The ground fault protection system shall be performance tested when first installed on site. The test shall be conducted in accordance with instructions that shall be provided with the equipment. A written record of this test shall be made and shall be provided to the Authority Having Jurisdiction and to the Engineer of Record.	
			12	Testing Data: Tabulate data for submission. Submit data on 8-1/2" x 11" sheets with date and name of checker with one copy for each operation and maintenance manual.	
				26 22 13 Dry Type Transformers (0-600 Volt)	
			1	All transformers to have copper windings.	
			2	Two winding, self-cooled general-purpose dry type transformers of kVA rating indicated on the drawings, constructed and fully tested in strict accordance with ANSI Standards. Sound levels shall not exceed the levels listed in this standard.	
			3	Single and Three Phase Less than 15 kVA: 150 degrees C. insulation system with a maximum full load temperature rise of 150 degrees C., non-ventilated encapsulated core and winding, single phase voltage ratio of 240 x 480 - 120/240/480 - 120/240 volts AC or 480 volts delta - 208Y/120 volts 480 volts delta 208Y/120 for 3-phase as noted on Plans. Primary winding equipped with full capacity 2-1/2% taps, two above and two below rated voltage, sheet steel NE Code gauge. Housing suitable for interior use with termination compartment providing reasonable space for conduit entrance and cable termination using 60 degree C. rated cable.	
			4	Single and Three Phase 15 kVA: 185 degrees C. insulation 30 kVA and larger - 220 degrees C. insulation system, with maximum full load temperature rise of 150 degrees C. and maximum hot spot rise of 180 degrees C. Single phase voltage ratio 240 x 480 - 120/240 volts AC, or 3 phase voltage ratio 480 volts delta - 208Y/120 volts as indicated on the drawings. Primary winding equipped with full capacity 2-1/2% taps, two above and four below rated voltage.	
			5	Core shall utilize low loss type grain oriented steel, fully clamped and located within the coil form. Coils and core varnish impregnated. Coils form spaced to provide positive air ducts and exteriors wrapped to protect wire. Terminate coil leads with solderless type crimp type lugs. Locate lugs on a rigid braced and insulated terminal board. Mount the core and coil assembly on an effective vibration damping and isolating system within a sheet steel NE code gauge enclosure having screened and baffled ventilation openings. Enclosure size shall provide reasonable space for conduit entrance and cable termination. Compartment temperature rise shall be limited to 50 degrees C. at full load and shall be suitable for 60 degrees C. rated cable.	
			6	All transformers 30 kVA and larger shall be floor mounted.	

Will Comply	Will Not Comply	N/A			Remarks for Not Complying
				DIVISION 26 – ELECTRICAL (cont.) **26 22 13 Dry Type Transformers (0-600 Volt)**	
			7	Refer to Section Grounding and Bonding.	
				26 24 13 Distribution Switchboards	
			1	Acceptable manufacturers for panelboards and switchgear are Square D, GE, Siemens, Eaton/Cutler Hammer.	
			2	All multi-pole breakers shall be specified to have internal trip mechanisms only.	
			3	Panelboard/switchgear schedules on the construction drawings shall be specified and detailed indicating circuit numbers, breaker size/poles connected, connected load amperage for each pole, total connected load (in kVA/kW and Amps), total demand and load (in kVA/kW and Amps), interrupting amperage capacity of lowest rated breaker.	
			4	All switchboards shall be provided with engraved nameplates.	
			5	Each branch device shall be provided with an engraved nameplate.	
			6	Space means complete provision for future installation of branch or feeder device, including mounting provisions and bus ties.	
			7	Spare means completely installed branch or feeder device for future use.	
			8	All switchboards shall be specified with meters, instruments, instrument switches, metering transformers.	
			9	Switchboards and circuit breakers shall be fully rated. Series rated switchboards and circuit breakers are not acceptable.	
			10	All circuit protective devices shall be of the same manufacturer. Exception: devices, which are generally not manufactured by more than a few manufacturers.	
			11	Switchboards located outdoors shall be weatherproof and rain tight, completely enclosed and gasketed.	
			12	Switchboards at grade shall be installed on a 4" minimum concrete pad, oversized by 6" on each side.	
				26 24 16 Panelboards	
			1	Acceptable manufacturers for panelboards and switchgear are Square D, GE, Siemens, Eaton/Cutler Hammer.	
			2	All multi-pole breakers shall be specified to have internal trip mechanisms only.	

Will Comply	Will Not Comply	N/A			Remarks for Not Complying
				DIVISION 26 – ELECTRICAL (cont.) **26 24 16 Panelboards**	
			3	Panelboard/switchgear schedules on the construction drawings shall be specified and detailed indicating circuit numbers, breaker size/poles connected, connected load amperage for each pole, total connected load (in kVA/.kW and Amps), total demand load (in kVA/kW and Amps), interrupting amperage capacity of lowest rated breaker.	
			4	Panelboards are dead front with bolt-on thermal magnetic circuit breakers with copper buses. Panel cover shall have hinged door-in-door feature.	
			5	A panelboard that has a main shall be located at the top or bottom of the panel, not in the branch circuiting.	
			6	All panels shall be provided with engraved nameplates.	
			7	All panelboards on one project are the products of one manufacturer. When adding to an existing facility, the new panelboards shall match the existing.	
			8	Provide 25% spares in 120/208 volt panelboards and 25% spares in 277/480 volt panelboards.	
			9	Space means complete provision for future installation of branch or feeder device, including mounting provisions, bus ties and blank cover plates.	
			10	Spare means completely installed branch or feeder device for future use.	
			11	Main device is circuit breaker or fusible bolted pressure contact switch.	
			12	Distribution devices are molded case circuit breakers.	
			13	Fusible devices have 3 spare fuses for each size mounted in a wall cabinet.	
				26 24 17 Distribution Panelboards	
			1	Acceptable manufacturers for panelboards and switchgear are Square D, GE, Siemens, Eaton/Cutler Hammer.	
			2	All multi-pole breakers shall be specified to have internal trip mechanisms only.	
			3	Panelboard/switchgear schedules on the construction drawings shall be specified and detailed indicating circuit numbers, breaker size/poles connected, connected load amperage for each pole, total connected load (in kVA/kW and Amps), total demand load in kVA/kW and Amps), interrupting amperage capacity of lowest rated breaker.	
			4	See Panelboards and Switchboards for other relative requirements.	

Will Comply	Will Not Comply	N/A			Remarks for Not Complying
				DIVISION 26 – ELECTRICAL (cont.) **26 27 13 Utility Service Entrance**	
			1	On remodeling, renovation and addition projects to existing facilities, the Electrical Engineer shall visit the site (prior to Phase II Submittal) and verify the condition of the existing electrical service.	
			2	The Electrical Engineer shall contact the local utility company and SCPS's Project Manager to obtain all relative information, obtain available fault current, verify existing maximum demand (for the past 12 months), coordinate service entrance requirements including voltage, load and the location of power company transformer and primary power lines.	
			3	Electrical service for new facilities shall be 277/480 volts, 3 phase, 4 wire.	
			4	New electrical services shall be provided with minimum 25% spare capacity for future modifications to the facility.	
				26 27 16 Cabinet and Enclosures for Electrical Systems	
			1	NEMA 3R or 4SS enclosures for exterior exposed locations. Enclosures subject to spray such as near a cooling tower shall be NEMA 4SS.	
			2	Exterior terminal cabinets shall have lockable covers.	
			3	Cabinets are of the same manufacturer as panelboards or nVent, or Austin Enclosures.	
			4	Minimum depth of all cabinets is 4".	
			5	Maximum height of top of cabinet to be less than 6'-6" (78 inches) AFF.	
				26 27 26 Wiring Devices	
			1	All classroom receptacles are to be standard power (standard color.) Classrooms do not require special clean power receptacles or circuits.	
			2	Convenience receptacle circuits shall be 20 Amp minimum.	
			3	Devices shall be specification grade 20 amps rated minimum.	
			4	All receptacles shall be heavy duty specification grade NEMA 5-20R, side wired, grounding type.	
			5	Provide minimum of four (4) 20 amp receptacle circuits per classroom.	
			6	Provide 20 amp 120 volt duplex receptacle in each classroom, on its own 20 amp 120 volt circuit, for charging cart. Provide engraved plate to read "Charging Station."	
			7	Provide one (1) quad receptacle, behind teaching video display and one (1) quad receptacle at teacher's desk in each classroom. These two quad outlets in each classroom shall be on one dedicated 20 amp circuit.	

Will Comply	Will Not Comply	N/A			Remarks for Not Complying
				DIVISION 26 – ELECTRICAL (cont.) **26 27 13 Utility Service Entrance**	
			8	Switches and receptacles connected to an "emergency" branch shall be red in color unless otherwise indicated.	
			9	All branch circuits shall be electrically continuous when any receptacle is removed.	
			10	Switches shall be specification grade 120/277 volt 20 amperes. Heavy duty, premium or specification grade as noted. Switches shall be side wired, quiet action, with captive mounting screws.	
			11	Switch and receptacle plates shall have 0040" thick, 302 high nickel stainless steel with a brushed satin finish and beveled edges. Screws shall be metal countersunk heads and finished to match plates.	
			12	Occupancy sensors are required in all spaces throughout building other than electrical rooms. Sensors shall be Dual Technology (PIR and Ultrasonic or PIR and Passive Acoustic). Sensors shall be manufactured by: Wattstopper, Hubbell Building Automation, or Acuity. Classrooms, Offices, and similar spaces shall have occupancy sensors set up for "Manual-On, Auto-Off" operation per Energy Code requirements. Spaces such as hallways, corridors, group toilet rooms and similar shall have sensors set up for "Auto-On, Auto-Off" operation. Electrical rooms shall have timer switches that include a manually activated "hold" feature for compliance with NEC 110.26(D).	
			13	Color for switches and receptacles shall be white or grey with the exception : isolated ground receptacles, emergency circuit devices, non-linear circuit devices, special purpose receptacles, range receptacles, dryer receptacles.	
			14	Special purpose receptacles shall be provided to suit equipment requirements.	
			15	All range and Dryer Receptacles shall be 4-wire. Dryer receptacle NEMA 14-30R. Range receptacle NEMA 14-50R.	
			16	Provide cover plates to suit each particular application.	
			17	All empty boxes shall be covered with a blank plate.	
			18	Coordinate location of devices with door swings, cabinets, movable partitions, ADA requirements, and architectural drawings.	
			19	Provide minimum one GFCI (ground fault circuit interrupter) outlet to custodial closets.	
			20	Provide at least two GFCI outlets to be used for testing/maintaining equipment in custodial storage.	
			21	All outside receptacles shall be of the weather resistant type per NFPA 70 Article 406.8.	
			22	All outside equipment shall have a service duplex not more than 25 feet from the equipment.	
			23	Provide receptacle(s) on roof for roof maintenance such that every spot on roof is within 150 feet of a receptacle.	

Will Comply	Will Not Comply	N/A			Remarks for Not Complying
				DIVISION 26 – ELECTRICAL (cont.) **26 27 73 Door Chime System**	
			1	Provide a door chime that annunciates both adjacent to the door and in the manager's office with exterior non-illuminated doorbell button at the receiving door of all kitchens.	
				26 28 19 Enclosed Disconnect Switches	
			1	Safety switches are heavy duty, quick-make, quick break, horsepower rated inappropriate.	
			2	Switches shall be three-pole, three-pole double throw or six-pole heavy-duty industrial type rated for the voltage at which they are applied. Provide a solid neutral bar for switches in 4-wire circuits.	
			3	All switches shall have switchblades, which are fully visible in the "off position when the door is open.	
			4	Switches shall have a quick make and quick break operating feature and mechanism, and shall produce a true interlock to prevent opening the switch cabinet while the switch handle is in the "on" position. The switch handle shall have provision for padlock.	
			5	Enclosure shall be NEMA 3R as a minimum for exterior locations. NEMA 4SS enclosures shall be specified where the disconnect will be exposed to spray, such as near a cooling tower.	
				26 32 13 Emergency Power	
			1	Whenever possible and after confirmation by the SCPS Project Manager, all emergency lighting and other emergency systems shall be powered by an emergency generator. Systems will include life safety peripherals such as fire alarm, elevator, communications equipment room (CER) including room HVAC, MDF and IDF rooms in addition to the life safety devices. The following shall also be included on the emergency generator: general purpose receptacles in the cafeteria area for emergency shelter use (minimum 3 circuits, 10 duplex receptacles); power for the kitchen freezer and cooler, and general purpose receptacles in the kitchen area (minimum 3 circuits, 18 receptacles) for food preparation. Emergency power shall also be provided for any on-site lift stations, site water treatment, storm water pumping systems, well pumps used for drinking water and fire pumps.	
			2	In addition to emergency lighting, exit/egress lighting, and fire alarm control panels (main and remote), power circuits and standalone HVAC equipment in CER rooms shall be on emergency power circuits.	
			3	Emergency generator shall be fueled by diesel and/or natural gas.	
			4	Emergency generator shall be located exterior to building in weatherproof housing with integral skid mounted tank (diesel only), 499 gallons or less. Provide battery light and all electrical as required by NFPA 110 for Level 1.	
			5	Emergency lighting for facilities that do not have an emergency generator shall be provided by a wall pack or ceiling mounted battery powered device. Bodine ballast fixtures are not permitted.	
			6	All mechanical, electrical and systems rooms shall have at least one emergency light fixture.	
			7	Optional standby circuits shall transfer to emergency generator no more than 60 seconds after loss of normal power. Life safety loads shall transfer to emergency generator no more than 10 seconds after loss of normal power.	

Will Comply	Will Not Comply	N/A			Remarks for Not Complying
				DIVISION 26 – ELECTRICAL (cont.) **Lightning Protection System**	
			1	New and Existing Construction: Per the requirements of FBC 453, all facilities in high lightning risk areas shall be evaluated using the Risk Assessment Guide in NFPA 780 and other standards which address lightning protection. Provide the report results to the district code official. The district code official shall review the report and determine whether to proceed in installing a lightning protection system.	
			2	Only UL listed lightning protection systems complying with NFPA 780 Lightning Protection Code may be installed.	
			3	Underground circuits installed in PVC conduit or direct buried, may be protected from lightning by installing a bare copper counterpoise, solid No. 2 wire or larger, laid six inches above the PVC conduits or six inches above direct buried cable or on top of the concrete envelope if used, with one counterpoise per ductbank. The counterpoise is bonded to a building ground electrode or a driven ground rod at each end.	
			4	All connections below grade shall be made by exothermic welding.	
			5	At least one connection shall be made between the lightning protection system and the building electric service ground.	
				26 43 00 Surge Suppression Equipment	
			1	Transient voltage surge suppression shall be included in the electrical design.	
			2	Transient voltage surge suppression system shall be provided at all branch circuit panelboards. The surge suppression system shall start at the main distribution panelboards and improve in quality and class at each point.	
			3	TVSS mounting and wiring shall conform to the manufacturer's instructions. Provide a suitable circuit breaker. The wiring is to take the most direct route from TVSS to ground bus.	
			4	All surge suppressor devices shall be manufactured by a company normally engaged in the design, development, and manufacture of such devices for electrical and electronics systems equipment. The manufacturer shall provide a ten-year warranty with free replacement in part or whole under any circumstance if the unit fails to perform within those ten years.	
			5	Provide surge protection on all 120 volt power connections for the fire alarm control panel, intercom, television and sound equipment, network equipment, telephone power supplies, and other electronic equipment.	
			6	Suppressors shall be fail-safe, shall allow no follow thru current, shall have repeated surge capability, and shall be solid state, self-restoring, and fully automatic.	
			7	Suppressors shall contain a visual indication at the suppressor to verify that the suppressor has failed or that the suppressor is operational and functional.	
			8	Suppressors shall be installed as close as practical to the equipment to be protected. Suppressors shall be close nippled to the device being protected in a positon near the neutral bus which will minimize lead length between suppressor and the buses or control breaker to which the suppressor connects. Suppressor leads shall not extend beyond the suppressor manufacturer's recommended maximum lead length.	
			9	Wiring lead dress shall be as short and as straight as possible.	

Will Comply	Will Not Comply	N/A			Remarks for Not Complying
				DIVISION 26 – ELECTRICAL (cont.) **26 43 00 Surge Suppression Equipment**	
			10	A UL listed lightning arrestor shall be specified and provided in the hand hole of each exterior lighting pole.	
				26 51 13 Interior Lighting Fixtures, Lamps and Ballasts	
			1	Interior lighting levels are to be the lesser of the average maintained levels listed in the IES Handbook or the levels listed below. However, in no case shall they be less than that required by FBC: General Office Space - 50 foot-candles; Conference Rooms - 30 foot-candles; Corridors - 15 foot-candles; Toilet Rooms - 30 foot-candles; Storage Rooms - 15 foot-candles; Classrooms - 50 foot-candles.	
			2	In general, all lighting shall be with dimmable LEDs.	
			3	Semi specular louvers and reflectors, where used, shall have fingerprint and dust resistant Achkroma finish, or approved equal.	
			4	Light fixtures shall not be located directly above stair risers. Fixtures will be located only over landings and level surfaces no higher than 10' AFF.	
			5	Architectural and custom lighting fixtures shall not be specified without SCPS approval.	
			6	Exit signs located in gymnasium spaces shall have protective cages.	
			7	Coffered type light fixtures shall NOT be used in any school or ancillary facility.	
			8	Incandescent lamps, including tungsten halogen lamps, shall only be installed for theatrical lighting and TV studios.	
			9	High school student toilet spaces shall have security grade fixtures with Lexan lenses.	
			10	The light fixture in time out rooms shall be recessed and have vandal resistant Lexan lens. The room light switch (and exhaust fan timer switch) shall be located outside of the room adjacent to the door on the latch side.	
			11	Lighting Control: Lighting control shall comply with FBC and ASHRAE requirements in effect at time project is permitted, including occupancy sensors and automatic control, interior and exterior.	
			12	Lighting Control (Classrooms With Windows Along One Wall): In general, there are to be three lighting zones: 1) One row of fixtures at front of classroom. 2) Fixtures at window wall per ASHRAE for daylighting control. 3) Remainder of lights. All lights in room to be LED. All lights in room to be on dimmer. Where zones overlap, lights within overlapping area shall be controlled by separate/additional control switch(es), i.e., where front row zone overlaps window daylighting zone - therefore, requiring four switches, one being the dimmer.	
			13	Lighting Control (Classroom With No Windows): In general, there are to be two lighting zones: 1) One row of fixtures at front of classroom. 2) Remainder of lights. All lights in room to be LED. All lights in room to be on dimmer.	

Will Comply	Will Not Comply	N/A			Remarks for Not Complying
				DIVISION 26 – ELECTRICAL (cont.) **26 51 13 Interior Lighting Fixtures, Lamps and Ballasts**	
			14	Lighting Control (Classrooms - Emergency, Projects With Emergency Generator): Connect one fixture at door and one fixture in diagonally opposite corner to emergency Life Safety System. Connect to appropriate lighting control zone for normal control. Use fail safe relay UL listed for use to activate upon loss of normal power.	
			15	Lighting Control (Classrooms - Emergency, Projects Without Emergency Generator): Provide battery operated emergency fixture(s) per NFPA, NEC, and FBC.	
			16	Lighting Control: Lighting in media center shall be multiple zone controlled.	
			17	Lighting Control: Occupancy sensors are required for all spaces except electrical rooms. Sensor shall be of the dual technology and ceiling mounted with a manual override switch at the door.	
			18	Lighting Control: All mechanical, electrical and storage rooms, mezzanines and closets shall have lighting that is controlled with 3HR mechanical switch timers.	
				26 52 13 Emergency Lighting Equipment	
			1	Exit light fixtures shall be energy saving LED type with battery pack back up if no generator.	
			2	Emergency battery units are to be provided in all interior stairs, corridors, group toilets and student occupied areas for facilities that do not have an emergency generator.	
			3	Bodine ballast fixtures are not permitted.	
			4	Exit signs and emergency lights located in gymnasium spaces shall have protective cages.	
				26 56 00 Exterior Luminaires	
			1	Mechanically held contactors shall be provided for exterior lighting circuits. Appropriate relays shall be provided where/when required for emergency lighting.	
			2	Light fixtures shall not be located directly above stair risers. Fixtures will be located only over landings and level surfaces, no higher than 10' AFF.	
			3	Architectural and custom lighting fixtures shall not be specified without Owner approval.	
			4	At least 25% of exterior lighting appropriately spaced and placed at all critical security locations shall be on one set of controls. The remainder shall be on the other set of controls. Individual photocells for each light fixture shall not be permitted. Lighting control of walkway and building mounted lighting shall be separate from parking areas. At a minimum, a facility shall have two levels of lighting control for the parking lot and two levels of lighting control for the walkways and building exteriors. Each exterior lighting control shall consist of a time clock, photocell and mechanically held contactor. The intent is for each level of the lighting to be from clock controlled with a photocell to turn off the lights in the event that daylight is present when the lights are scheduled to be on.	
			5	All exterior lighting shall be LED (pole lighting and wall pack fixtures.)	

Will Comply	Will Not Comply	N/A			Remarks for Not Complying
				DIVISION 26 – ELECTRICAL (cont.) **26 56 00 Exterior Luminaires**	
			6	Raceways connecting surface mount, aluminum walkway canopy lighting shall be located on the top side of the canopy decking.	
			7	Wall pack type light fixtures shall be surface mounted and not recessed into block or brickwork.	
			8	Light fixtures shall not be located directly under roof scuppers.	
			9	Each individual pole light shall have an individual surface mounted pullbox with the pullbox mounted on the side of the pole even with pole hand hole. The box shall be Hoffman A-8R64 or equal, and be a minimum of 8" high by 6" wide by 4" deep, NEMA 3R galvanized steel enclosure with gray polyester powder finish and slip on cover fastened with steel screws, with adequate length of excess wire in the box to allow for subsequent removal/replacement of the associated pole and splicing of cable. Non-metallic pullboxes are not acceptable for this application due to susceptibility to damage.	
			10	The pole mounted pull box shall be utilized to make up joints in conductors and shall contain in-line fusing for the pole fixture, and a UL listed lightning arrester. Adequate length of excess wire shall be provided to box to facilitate removal/replacement of pole light and splicing of conductors.	
			11	All poles for all exterior pole mounted lighting shall only be constructed of precast concrete poles and shall not exceed 30 AFG in height to the fixture.	
			12	Exterior Lighting: All entry doors outside the building shall be illuminated by a light fixture.	
			13	Exterior Lighting: Use of bollards with lights or other low level lighting fixtures require approval by the SCPS Project Manager.	
			14	A HAND-OFF-AUTO Selector Switch shall be installed at all lighting contactor locations for bypass, troubleshooting, and maintenance purposes.	

Will Comply	Will Not Comply	N/A			Remarks for Not Complying
				DIVISION 27 - COMMUNICATIONS **27 01 05 Demolition**	
			1	Provide one foreman who has had a minimum of five years previous successful experience on projects of comparable sizes and complexity. The foreman shall be present at all times when work is being performed. A resume of the foreman's experience shall be submitted to Engineer before starting work.	
			2	During the execution of the work all required relocation, rerouting, etc., of existing equipment and systems from any existing facility shall be performed by this Contractor, as indicated on the drawings, or as required by job conditions and as determined by the Engineer in the field, to facilitate the installation of the new system. SCPS shall require continuous operation of existing systems, while relocation work or new tie-ins are performed.	
			3	Prior to any deactivation or relocation, this Contractor shall arrange a conference with the Architect, Engineer and SCPS Project Manager in the field to inspect each of the items to be deactivated, removed or relocated. Care shall be taken to protect all equipment designated to be relocated and reused or to remain in operation and be integrated with the new system.	
			4	Provisions: All required equipment deactivation, relocation, and temporary service tie-in connections shall be provided by this Contractor.	
			5	SCPs Salvage: SCPS reserves the right to inspect the material scheduled for removal and salvage any items he deems usable as spare parts.	
			6	Phasing: The Contractor shall perform all work in phases as directed by the Architect to suit the project progress schedule, as well as the completion date of the project.	
			7	General: Before commencing the work, verify the conditions at the premises including, but not limited to, location and all dimensions, characteristics and relationship to adjacent facilities, site utilities, equipment types, and all adjoining work on which this work is in anyway dependent according to the intent of these Contract Documents.	
			8	Responsibility: No waiver of responsibility for defective and inadequate work or additional cost as a result of existing conditions which should have been verified, shall be considered unless notice of same has been filed by the Contractor and agreed to in writing by the Architect before the bid date.	
			9	Site Renovation; The Contractor shall verify and coordinate existing site conduits and pipes at any excavation on site. Bids to include hand digging and all required rerouting in areas of existing conduits and pipes.	
			10	Renovation: Investigate site thoroughly and reroute all conduit and wiring in area of new construction as required to coordinate conflicts. Conduits shown on plans reflect approximate locations only. All required conduit installation shall be coordinated with the governing Architectural and Civil drawings.	
			11	System Changes: Special attention is called to the fact that work involved is in connection with existing SCPS equipment, which must remain in operation. Work must be done in accordance with the priority schedule. Schedule work for a minimum outage to SCPS. Request written permission and receive written acceptance from SCPS no later than 24 hours in advance of all communication shutdowns. Perform work required, at other than standard working hours, when SCPS cannot accept outages during regular working hours.	
				27 41 29 Voice, Data, Audio, Video Systems General	
			1	Provide one foreman who has had a minimum of five years previous successful experience on projects of comparable sizes and complexity. The foreman shall be present at all times when work is being performed. A resume of the foreman's experience shall be submitted to Engineer before starting work.	
			2	All systems, cabling, communications closets, racks, panels and raceway design shall comply with the diagrams and layouts indicated in Appendices I, J and K.	

Will Comply	Will Not Comply	N/A			Remarks for Not Complying
				DIVISION 27 – COMMUNICATIONS (cont.) **27 41 29 Voice, Data, Audio, Video Systems General**	
			3	All systems and their raceway design shall comply with the appropriate section, chapter, an/or article of NFPA 70 (NEC), SREF, EIA/TIA-568-A, EIA/TIA-569, EIA/TIA-606, EIA/TIA-607, and the BICSI Telecommunications Distribution Methods Manual (TDMM).	
			4	Grounding design for all systems shall comply with the appropriate section, chapter and/or article of NFPA 70 (NEC), EIA/TIA-607 and the BICSI TDMM.	
			5	All underground cabling shall be continuous (without splices) between buildings. If distance makes this impossible, above ground access terminal enclosures shall be provided in lieu of splicing. Splices in underground pull boxes shall not be allowed. The use of above ground access terminal enclosures shall be determined on a case-by-case basis and shall be approved by the SCPS Owner's Construction Representative.	
			6	All metallic conductors shall be copper.	
			7	Complete surge protection for all copper cables shall be specified for all cables entering and exiting buildings. Surge suppression shall be specified in accordance with this system's equipment manufacturer's recommendations.	
			8	Systems shall be designed with spare capacity to accommodate a minimum of twenty percent (20%) for future expansion, in addition to providing services to fifteen (15) portables, at all schools, in addition to the specific project requirements.	
			9	Flush mounted boxes, exclusive of finish rings, for devices shall be a minimum of 2-5/8" deep and 4" square.	
			10	The system design shall provide for empty and capped raceways in vicinity close to the future portable area for the school if portables are not provided as part of the initial project design. The portable end of the raceways shall extend a minimum of 5' from the building and shall be marked with a permanent concrete marker.	
			11	The system specifications shall require the Contractor to provide point-to-point wiring diagrams as part of the project record drawings/documents (as-builts).	
			12	When the use of floor boxes or intrafloor raceways have been approved in writing by the SCPS project manager, the boxes shall be cast iron recessed boxes and plates shall be either aluminum, stainless steel or brass multiple service type. Plastic boxes shall not be specified.	
			13	System cables above accessible ceilings shall be run without raceways provided complete installation complies with all applicable codes and standards. Proper cable type, sleeves, fire stopping, and support hardware shall be utilized.	
			14	The specifications shall require the contractor to furnish and install one reduced size copy of as-built drawings in a permanent holder mounted in the MDF Room. Location of these drawings shall be coordinated with the Owner prior to final acceptance.	
			15	The specifications shall require the "as-built" drawings to include (as a minimum) the following items: overall site plan showing all exterior cable runs with distances (scale) between buildings, MDF and IDF locations, service entrance routing and termination points for telephone and CATV company service entrance. Building floor plans showing service entrance and routing of satellite earth; all devices, all cable runs with distances between device and MDF/IDF rooms, all cable runs identified as labeled by the contractor, backbone routing within the building. Differentiation shall be clearly made between copper and fiber optic cables. Enlarged plans shall be all CER and CC rooms showing equipment racks, cable tray, power panels, terminal cabinets, power outlets, service entrance point of entry, etc., rack elevations for all equipment racks showing all equipment as installed, a complete schematic drawing for the MDF and each IDF.	

Will Comply	Will Not Comply	N/A			Remarks for Not Complying
				DIVISION 27 - COMMUNICATIONS (cont.) **27 41 29 Voice, Data, Audio, Video Systems General**	
			16	Where power is required for a system device (e.g., PDS outlets) the designer shall ensure that accompanying power outlets are provided and locations coordinated at appropriate mounting heights, orientation, etc.	
			17	The specifications shall require the Contractor to accomplish field coordination of different systems areas within the MDF and IDF spaces prior to rough-in. In existing facilities where MDF or IDF rooms may already exist, the designer shall visit the site to determine the available space requirements.	
			18	The specifications shall require the contractor to provide, prior to acceptance of the system by SCPS, test results for all PDS system cables. All cable test results shall be included in an electronic format. The cable test results will be in a software format that can be viewed by a Windows computer. At least one copy of the test result will be provided to the SCPS IS Department. For copper cabling, the cable testing will be performed by either an Ideal or Fluke Networks cable test equipment. The contractor will use an Ideal LanTEK II or Lan TEK III cable testers, or a Fluke Networks DSX-5000 or DSX08000 Cable Analyzer to test all cabling that the contractor installs. All Category 6 copper cabling installed must pass either TIA Category 6 ANSI/TIA-568-C.2 test standards from that cable test equipment manufacturer. All Category 6A copper cabling installed must pass either TIA Category 6A ANSI/TIA-568-C.2 test standards from that cable test equipment manufacturer. Cable testing will include the exact length of each of the copper cables installed by the contractor. Cable test equipment shall have a current certificate of calibration from the manufacturer's authorized service center. A copy of the Certificate of Calibration from the manufacturer will be provided when the cabling test results are delivered to SCPS. All fiber optic cabling shall be tested with Optical Time Domain Reflectometer (OTDR). For each fiber optic cable strand, the OTDR will perform at a minimum, following fiber optic test criteria; optical wavelength, fiber type, dB Loss, continuity, attenuation specification, bandwidth specification, fiber and cable labelling, cable length date of test. All cable test results shall be included in an electronic format. The cable test results will be in a software format that can be viewed by a Windows computer. At least one copy of the test result will be provided to the SCPS IS Department.	
			19	Manufacturer for fiber (terminations, bulkhead connections, fan-out kits, patch panels, mounted enclosures, and cable) to be Corning.	
			20	Data jacks and patch panels to be Hubbell keystone configuration.	
			21	Data Category 6 and Category 6A cabling shall be Hubbell.	

Will Comply	Will Not Comply	N/A			Remarks for Not Complying
				DIVISION 27 - COMMUNICATIONS (cont.) **Main Distribution Frame (MDF) and Intermediate Distribution Frame (IDF) Equipment Rooms**	
			1	All MDF and IDF equipment rooms shall be designed and clearly detailed with a layout configuration in accordance with EIA/TIA-569-A, the BICSI TDMM. Shallow closets shall only be used where required to meet the EIA/TIA 100 Meter rule for horizontal cable. Use of the Shallow closet shall be approved by the SCPS Project Manager prior to completion of the project design.	
			2	MDF and IDF rooms shall be located for convenient access without disruption or disturbance of classes.	
			3	The MDF and IDF rooms shall be provided with Class A/B, Flame Spread Class A.	
			4	Plywood backboard 3/4, painted with gray fire retardant paint, all around the room. Install bottom at 6" above floor.	
			5	Height of plywood to be minimum 8' or for rooms 8' in height, to top of ceiling elevation. The specifications shall require termination backboards to be fastened securely to the wall.	
			6	Premise Distribution (PDS), Public Address/Bell Signaling (PABS) System, and Point of Sale (POS) System raceway and/or pathways shall be designed, detailed and constructed to have individual, direct pathways to the MDF/IDF as applicable (star topology). Series, feed through or "daisy chain" designs or installations are unacceptable.	
			7	The designer shall ensure through coordination with the Mechanical Engineer, that adequate stand-alone space conditioning is provided in the MDF Room.	
			8	Where system equipment is installed in a secured (lockable) MDF or IDF room, open equipment racks shall be used. Where system equipment is installed in an area accessible to students or teachers, lockable equipment cabinets shall be used.	
			9	The size of the MDF Room varies based on the quantity and types of communications delivered to the work area. Nominal sizes are as follows: Communicators Outlets — Area (Square Feet) 0 - 180 — 165 181 - 279 — 225 280 - 400 — 300 400 and above — 400	
			10	There shall be a minimum of one IDF per floor. Additional IDF rooms shall be provided when the floor area to be served exceeds 10,000 sq. frt. Or when the longest cable horizontal distribution distance to a CO exceeds 280 ft. Communications Outlets — Closet Area (sq. ft.) 0 - 180 — 70 sq. ft. 181 - 360 — 110 sq. ft. 361 and above — 200 sq. ft.	
			11	Equipment racks will be installed in the MDF/IDF to support communication systems. Each rack will be properly grounded and secured to the floor. The specifications shall require all equipment racks to be installed with a minimum 3' clearance on the front, and 4' on the rear side, measured from the rack center line to the wall, to provide access for maintenance and operation. This is to take into consideration any equipment that might be placed in the rack.	
			12	In multistory buildings, IDF rooms shall be designed such that they are located directly above each other on each floor.	

Will Comply	Will Not Comply	N/A			Remarks for Not Complying
				DIVISION 27 - COMMUNICATIONS (cont.) **Cabling**	
			1	The design and specifications shall require systems wiring and/or raceways to be located away from any surface that may become hot, including but not limited to, hot water piping and heating ducts.	
			2	The specifications shall require systems wiring to be installed with at least 12" of separation from line voltage power wiring on parallel runs. Wiring crossing power circuits shall be at right angles. For metal enclosed electric light or power or Class 1 circuits, separation may be reduced as described in the NEC Article 800. Increase separation if so required to comply with EIA/TIA referenced standards.	
			3	Cable ends (slack) shall be as follows: MDF - Fiber and copper cables terminating in the CER shall have enough spare cable length left in the MDF to be routed to the equipment rack or backboard, then down to the floor plus 3'. IDF - Fiber cables and copper backbone cables terminating in the CC shall have the same amount of spare cable length left in the CC as specified for the CER above. The four 4-pair UTP cables shall be terminated with enough spare cable length to be routed to the equipment rack or backboard and down to the floor plus 3'. Communications Outlets - At the CO's, the four 4-pair UTP cables shall terminate with approximately 3' of spare cable length. This spare cable shall be pulled out at CO's that are wall or floor mounted during cable installation. Following installation.	
			4	Spare cable length shall be pushed back into the wall or floor for future use in terminating cables.	
				Sleeves	
			1	The specifications and drawings shall require rigid steel conduit sleeves (with bushings on both ends) at penetration of all walls above ceilings. Stub-out each side of wall a minimum of 12". Sleeve shall be installed so they shall not slide within the wall penetration. Where used in conjunction with cable tray, sleeves shall be electrically bonded to the cable tray. Proper firestopping of sleeves per UL criteria shall be indicated at all rated firewall/smoke wall penetrations.	
			2	Sleeve sizes shall be specified to be no less than 3" diameter, nor smaller than that required by EIA/TIA-569, Table 4.1-1 Conduit Sizing. Sleeves for horizontal wiring shall not be smaller than 4" for every 30 communications outlets.	
				Raceways, Pathway For Systems	
			1	The specifications shall require bend radius to have a minimum inside radius of six times the internal diameter of the raceway. Raceway bend radius shall be increased to ten times for raceway larger than 2" size. Increase bend radius as necessary to meet minimum Code and Standard requirements for specific systems.	
			2	The specifications shall require conduit that will carry fiber optic cable(s) to have a minimum bend radius no less than ten times the internal diameter of the conduit, and that the sidewall pressure of any cable when being pulled does not exceed the manufacturer's recommendations for the cable used.	
			3	The specifications and drawings shall require all raceways to be installed so no more than two 90 degree bends are in any raceway section without a pullbox, handhole, or manhole. Additional pullboxes, handholes or manholes shall be installed as required to maintain maximum of two 90 degree bends between pullboxes and/or termination points.	
			4	The specifications and drawings shall require all raceways to be installed so no more than 100' of raceway are in any raceway section without a pullbox, handhole, or manhole. Additional pullboxes, handholes or manholes shall be installed as required to maintain maximum of 100' between pullboxes and/or termination points.	
			5	The specifications and drawings shall require all raceways to be labeled at both ends to indicate destination and source. Labeling shall indicate length of each raceway. This labeling/identification shall be fully documented in as-built (record) drawings. In addition to labeling raceways, the specifications shall require labeling, at both ends, all pull strings installed in raceways.	

Will Comply	Will Not Comply	N/A			Remarks for Not Complying
				DIVISION 27 - COMMUNICATIONS (cont.) **Raceways, Pathway For Systems**	
			6	Pathways/raceways at terminal board locations shall be neatly racked on a Kindorf type rack secured to wall above and/or below terminal boards.	
			7	Wall mounted devices shall be flush mounted. Conduit shall be provided within wall spaces for all system drops to wall mounted flush devices. Conduit shall be hidden within walls to allow proper installation of flush mounted devices. Conduit shall terminate stub in ceiling cavity with an "ell" to facilitate cable entry into wall stub. Where it is not practical to flush mount devices such as existing, and where permitted by the SCPS Project Manager, surface mounted raceway may be allowed.	
			8	Insulating bushing shall be provided at all raceway ends.	
			9	The specifications shall require underground communications conduit to be separated from power conduits by a minimum of 3" of concrete or 12" of compacted earth.	
			10	Interbuilding conduit capacity shall be specified as follows: Number of (No. 24 AWG) Pairs Within a Single Cable: 6, 12, 25, 50 Number of Above Cables That Will Fit in a 4" Conduit: 21, 19, 14, 9	
			11	Utility columns (referred to as "power poles") shall be specified and detailed for communications outlets and associated power circuits for open work areas away from walls. The aesthetics of such shall be considered in design of the columns. Specifications shall require the utility columns to be rigidly attached (top and bottom) and laterally braced as necessary to overcome movement both horizontally and vertically. The columns (locations and quantities) shall be designed and placed at central points such that a cable/cord run from any pole shall not exceed 15' in length.	
			12	Utility columns used for both communications and power distribution shall contain a partition to separate the communication cables from the power cables. Communication wiring to the utility column in the ceiling may be provided via raceway, conduit or by use of open wiring where permitted by applicable code. Power wiring to the utility column shall be placed in conduit, which is secured to a junction box attached to the top of the utility column. All loose communication cables from the MDF or IDF shall be grouped and bound in such a manner as to not crimp or damage any cable.	
			13	Power and data cables shall be terminated onto a power/CO receptacle on the pole and not on the furniture or equipment. Horizontal cabling shall not run continuous through the pole to the PC, furniture or equipment.	
			14	All backbone (riser) cabling shall be splice-free between MDF and IDF.	
			15	The backbone (riser) design shall confirm with the requirements of EIA/TIA-569; however, as a minimum, 4" conduits shall be provided for every 150 communications outlet boxes served. A minimum 3" conduit shall be provided for every IDF located on the same floor or other floors that will be interconnected to the DF. The designer shall increase the conduit size and quantity as required for cable and fiber being provided.	
			16	The design shall include one fifty pair Category 3 or higher cable for voice circuits between the MDF and every Building.	
			17	All exterior and underground voice backbone cabling between the MDF and IDF shall be specified to be fifty pair Category 3, gel-filled, UTP cable.	

Will Comply	Will Not Comply	N/A			Remarks for Not Complying
				DIVISION 27 - COMMUNICATIONS (cont.) **Raceways, Pathway For Systems**	
			18	The cable pair size shall govern inter/intra building cable, cable between surge protector blocks and voice patch panel in rack, and size/quantity of voice patch panel ports.	
			19	The voice backbone cabling design between MDF and IDF rooms and interbuilding cabling shall, on both ends, terminate on AT&T 188 (or Lucent 489A) - Type Multi-pair Protector Panels. Input wiring for the protector panel shall be in an enclosed chamber with a 110 style Wiring Block. Output wiring for the protector panel shall be a 110 style Wiring Block. 188 (or 489A) - Type 5 pin solid state protectors (4C1S), shall be provided with the Protector Panel. Because SCPS uses telephone switches that use both analog and digital handsets, the exact type and quantity of 188 (or 489A) protectors shall be coordinated with the SCPS Project Manager.	
			20	All systems backbone (riser) cabling shall, upon entry into a building, remain in appropriate raceway until it enters the MDF or IDF room to which it is being terminated. The use of patch panels to transition from outside plant (OSP) cable to indoor riser cable shall not be allowed.	
			21	Voice backbone cabling from the 188 (or 489A) - Type Protector Panels to the Voice Patch Panels in the MDF/IDF equipment racks shall be Category 3, UTP cables. Terminations at both ends to be 110 type. Backbone cable between Protector Panels and Patch Panels shall match incoming backbone cable size/pair count.	
			22	The designer shall specify and design voice patch panels of sufficient size to accommodate all backbone cable pairs with each (1) pair terminated per voice patch panel port. Pairs shall not be skipped in a cable. All pairs shall be terminated starting at pair one sequentially with any extra spare pairs being in a single grouping of the highest pairs. As an example of not skipping pairs in interfacing a 50 pair cable with a 48 port voice patch panel, pair 49 and 50 would be spare. Having say pairs 25 and 50 as spares is not acceptable as this constitutes a skipped pair and non-sequential termination.	
			23	Voice patch panels shall be provided at each IDF and MDF to facilitate patching from the communications outlet patch panels to the communications outlet patch panels with RJ45 style patch cords.	
			24	The Owner shall furnish all patch cords between voice patch panel and communications outlet patch panel. Owner will provide data patch cables for computers, printers, scanners, projectors, teacher display monitors, VoIP phones wireless access points. Contractor will provide all data patch cables for building control systems including but not limited to: fire alarm systems, HVAC systems, intrusion detection systems, PABS, and video surveillance systems. Contactor patch cables must meet the owner CAT6 patch cable standards.	
			25	Data backbone cabling shall be splice-free between buildings.	
				Pull Boxes	
			1	The specifications will specifically not allow conduit fittings to be used in place of pullboxes.	
			2	The specifications shall require interior pullboxes to be located in a conduit run wherever any of the following conditions exist; at every 100' interval, between two 90 degree bends, between one reverse (180 degree) bend in the run.	
			3	The specifications shall require pullboxes to be placed in a straight section of conduit run and not used in lieu of a bend. The corresponding conduit ends shall be aligned directly across from each other.	
			4	All interior pullboxes shall have a screw fastened or hinged cover.	

Will Comply	Will Not Comply	N/A			Remarks for Not Complying
				DIVISION 27 - COMMUNICATIONS (cont.) **Pull Boxes**	
			5	The designer shall size all pullboxes per BICSI specifications.	
			6	Site pullboxes shall include: hinged spring assist bolt done traffic rated cover, full bottom, pulling eyes. Size to be minimum 3' wide, 6' long, 4' deep. Cover to be clearly marked "COMMUNICATIONS."	
			7	Where site pullboxes are used for telephone service entrance, they shall comply with the local telephone company provider requirements.	
			8	The specifications shall prohibit pullboxes from being used for splicing cables together (riser cabling shall be of a continuous run and not spliced.) Conduit entering the handholes shall be aligned on opposite walls of the hole at the same elevation.	
			9	The specifications shall require pullboxes to be used when bends exceed a total of 180 degrees or a maximum of two bends less than or equal to 990 degrees, or if the conduit section length requires the pulling of cable in two segments. Cable bend radius shall be observed at all times.	
			10	The designer shall locate site pullboxes when a conduit or duct section length exceeds 600 feet. When cable diameters exceed 2.5 inches, manhole spacing shall not exceed 600 feet.	
				Cable Trays	
			1	Cable tray shall be designed and provided in the MDF and IDF rooms.	
			2	The designer shall specify cable trays to be supported at a maximum spacing between supports no greater than four feet.	
			3	Cable trays shall be specified to be installed at approximately 8 ft. AFF in the MDF and IDF rooms.	
			4	The specifications shall require all cable tray sections to be properly grounded. Permanently attached bonding jumpers shall be provided at each section connection point to ensure minimal resistance.	
				J-Hooks and Cable Support	
			1	Where large quantity of cables are congested in an area, such as near MDF or IDF, special supports shall be as specified that are designed to carry the additional weight.	
			2	J-Hooks size shall be as specified to provide for the cables to be installed, plus 50% spare and still not exceed rating of support device.	
			3	The specifications shall prohibit cables to sag more than eight inches. In areas where cable sag exceeds eight inches, the specifications shall require additional J-Hook supports.	
				27 05 26 Grounding	
			1	A complete grounding system shall be designed in MDF and IDF spaces to comply with all applicable codes and standards referenced within these guidelines.	

Will Comply	Will Not Comply	N/A			Remarks for Not Complying
				DIVISION 27 - COMMUNICATIONS (cont.) **27 05 26 Grounding**	
			2	The Designer shall include and coordinate the requirements with the Electrical Engineer, a "System" ground bus bar for each MDF/IDF room. The ground bus shall be connected to the local step-down transformer ground bus (use same transformer that feeds the 120 volts to the MDF/IDF systems equipment.) The ground wire to the bus shall be #2/0 copper conductor in 1" conduit. If service voltage line to neutral is 120 volts, connect to the building service ground bus and ground electrode/rod.	
			3	The specifications and drawings shall require all equipment racks to be properly connected to building "systems" ground bus bar (to be mounted in each MDF/IDF room) with a #6 AWG green insulated copper ground wire. In addition, the following items shall be grounded similarly as well; metal conduit ends (via grounding bushing,) all cable shields, all surge suppression equipment, and all equipment racks and cabinets.	
			4	The Designer shall specify a "local" ground bus bar in each terminal cabinet housing surge protection equipment.	
			5	The specifications shall require grounding conductors and jumpers to be a minimum size #6 copper wire.	
				Surge Protection/Isolation	
			1	Surge protection shall be required on all Category X Cable installed in any of the following conditions: a) Any device that is mounted on the exterior of the building. b) Any device not higher than 4' and within 10' of the building (if outside this parameter, the equipment shall be fed via F.O. cable.)	
			2	Surge Equipment Requirements: a) System shall be rack mounted with modular surge modules allowing individual replacement of modules. b) Install surge in rack adjacent o patch panel containing devices requiring surge protection.	
				Telecommunications and CATV Systems - Service	
			1	The Designer shall coordinate with the local Telephone and CATV Service Companies prior to completion of the design documents to ensure the service entrance raceways and termination points are sized and located properly. Service entrance raceways shall be terminated at the property line as directed by the Telephone and CATV Company's Field Designers and clearly indicated on the construction documents. Other than actual field location at time of installation, the construction contractor shall not be required to determine the final termination point at the property line.	
			2	Telephone service entrance requirements shall be as required by the local telephone company. In no instance shall the service entrance raceway design be less than two 4 inch raceways from the property line to the CER, plus one 4 inch with four 1 inch innerducts with innerduct flat pull tape in each. Raceway material shall be rigid Schedule 40 PC.	
			3	Telephone and CATV service conduits shall be buried with at least 24 inches of cover.	
			4	When an elevator is included in the project, the designer shall design and specify provisions (raceways, wiring, etc.) for elevator emergency phone(s) in accordance with the requirements of the applicable sections of NFPA and ANSI A17.1 Safety Code for Elevators and Escalators.	
			5	The specifications shall require a continuous orange plastic warning tape buried above the service conduit stating "CAUTION-TELEPHONE LINE BURIED BELOW," or similar approved wording. Tape shall be 6 inches wide, 6 mil plastic with minimum 600% elongation (extra-stretch.)	

Will Comply	Will Not Comply	N/A			Remarks for Not Complying
				DIVISION 27 - COMMUNICATIONS (cont.) **Backbone Cable/Raceway/Pathway/Patch Panels**	
			1	All backbone/riser cabling between buildings (MDF and IDFs) shall be continuous and splice-free.	
			2	Backbone/riser Voice and Data cables shall be designed for installation in separate raceways. Separate innerducts within a common conduit shall be considered separate raceways.	
			3	Each IDF is to be connected to the campus MDF with a hybrid fiber optic cable; 24 Strand 50/125 multimode (OM4) and 12 strand Singlemode (SM1) backbone fiber cable supporting data applications.	
			4	All fiber strands shall be field terminated to ST style connectors and mount in a Corning rack mount fiber optic enclosure. Terminations with a greater than 0.5 dB loss shall not be acceptable.	
			5	Backbone/riser cable run distances shall be limited to the following: UTP Voice Applications (<5MH) 2624 ft. UTP Data Applications (>5MH) 295 ft. 50 um Fiber Data Applications 1600 ft. Singlemode Fiber Applications 9840 ft.	
				Horizontal Cable/Raceway/Pathway/Patch Panels	
			1	All horizontal cables shall be terminated at Communications Outlet patch panel in order, lowest room number first.	
			2	Horizontal cabling shall be splice-free between the Communication Outlet and the Communication Outlet patch panel.	
			3	All horizontal voice and data cabling shall be four pair Category 6 (6A for wireless access points), UTP and shall terminate at the Communication Outlet on one end and the Communication Outlet Patch Panel on the other end.	
			4	All horizontal Category 6 UTP cables (6A for wireless access points) shall have all four pairs fully terminated in an eight position connector at the Communication Outlet and to an IDC type connector on the back of the Communication Outlet patch panel. Pairs shall not be split between connectors.	
			5	Provide, install and terminate one four pair Category 6, UTP cable for each port in each Communications Outlet. (Connect between Communications Outlet and Communications Outlet patch panel, port for port.)	
			6	Communications Outlet Patch Panel: Provide quantity of ports to terminate all Communications Outlet horizontal cables, plus 25% spare. Round up to next standard 24 or 48 port patch panel size.	
			7	Communications Outlets shall not be located within 6 feet of any source of water or electrical transformer, and shall not be located behind any casework.	
			8	Communication Outlets shall not be located beneath marker boards.	
			9	All CCTV, Electrical Power Monitoring, Sprinkler Controller, and BAS category cable shall be terminated in the uppermost patch panel in IDF/MDF rack.	
			10	All patch panels, outlets, jacks, and cable shall be by same manufacturer and will be provided with a 25 year link warranty.	

Will Comply	Will Not Comply	N/A			Remarks for Not Complying
				DIVISION 27 - COMMUNICATIONS (cont.) **Horizontal Cable/Raceway/Pathway/Patch Panels**	
			11	Contractor will provide all outlet patch cables for building control systems including but not limited to: fire alarm, systems, HVAC systems, intrusion detection systems, PABS, and video surveillance systems. Contactor patch cables must meet the Owner CAT 6 Patch Cable Standards. Owner will furnish all other outlet patch cables.	
			12	The typical classroom communications outlet shall be a single gang faceplate capable of mounting six modular connectors. The Student Communication Outlet shall be provided in the design with four Category 6 Data jack modules each connected via one Category 6 cable to the Communication Outlet Patch Panel in the associated MDF or IDF. All unused module slots shall be provided with blanks and all installed jack modules shall be provided with dust covers. The outlet shall have the designation symbol "4P" (the number "4" being the quantity of wired ports, up to six, on the outlet; and the letter "P" as data) on the construction drawings next to the graphic symbol. The designer shall ensure a "3P" (3 wired ports) communications outlet is located at the teacher's work station location. Larger number of wired ports may be necessary in spaces requiring an increased number of network connections such as computer labs.	
			13	The typical administration workstation communications outlet shall be a single gang faceplate capable of mounting six modular connectors. The administrative communication outlet shall be provided in the base design with three Category 6 Data jack modules each connected via one Category 6 cable to the Communication Outlet Patch Panel in the associated MDF or IDF. All unused module slots shall be provided with blanks and all installed jack modules shall be provided with dust covers. The outlet shall have the designation symbol "3P" on the construction drawings next to the graphic symbol. The designer shall ensure a communications outlet is located at each administrative workstation location.	
			14	Every Teacher Planning Room shall be provided with one "3P" type communications outlet for each teacher station within the space.	
			15	A "2P" type communications outlet shall be designed and located at the CCTV head end, CCTV studio and control room, main mechanical space or as needed to connect to HVAC control CPU.	
			16	A "2P" type communications outlet shall be designed and located at all cashier's stations at the cafeteria serving lines.	
			17	A "5P" type communications outlet shall be designed and located in the food service manager's office.	
			18	Locate one PDS type P single cabled voice/data outlet at intercom rack, security control panel and fire alarm (FACP) locations.	
			19	Locate one PDS type 2P data outlet fire alarm control panel (FACP.)	
			20	Wireless Access Points: Provide PDS type data outlets for wireless access points throughout all buildings. Terminate CAT 6A cables at each outlet. Wireless access point jacks shall be orange. Provide high visible label on ceiling below each outlet if outlet is not directly visible.	

Will Comply	Will Not Comply	N/A			Remarks for Not Complying
				DIVISION 27 - COMMUNICATIONS (cont.) **Horizontal Cable/Raceway/Pathway/Patch Panels**	
			20	a) In all classrooms and instructional rooms with drop ceiling at 12 feet or below, place (1) PDS type 2P data outlet above drop ceiling. Locate outlet for wireless access point above ceiling tiles as close to center of each classroom as possible. 2P data outlet should be located between 12 to 18 inches above drop ceiling. If drop ceiling is above 12 feet or if classroom has no drop ceiling place (1) PDS type 2P data outlet on classroom wall between 10 to 12 feet off the floor. The classroom wall should not have any obstructions blocking the wireless access point wireless coverage of the room.	
			20	b) In media center with drop ceiling at 12 feet or below install (3) PDS type 2P data outlets for wireless access points above drop ceiling. The three 2P outlets should be at equal distances around the room. The 2P data outlets should be located between 12 to 18 inches above drop ceiling. If drop ceiling is above 12 feet or if media center has no drop ceiling, then place the (3) PDS type 2P data outlets on media center walls at equal distances around room between 10 to 12 feet off the floor. The wall area where outlets will be placed should not have any obstructions blocking the wireless access point wireless coverage in media center room. If questions arise about exact placement of outlets in these rooms, Contractor should contact IS Department.	
			20	c) In media center with group project rooms and media production rooms with drop ceiling at 12 feet or below place (1) PDS type 2P data outlet above drop ceiling in these rooms. Locate outlet for wireless access point above ceiling tiles as close to center of each room as possible. 2P data outlet should be located between 12 to 18 inches above drop ceiling. If drop ceiling is above 12 feet or if room has no drop ceiling, place (1) PDS type 2P data outlet on room wall between 10 to 12 feet off the floor. The room wall should not have any obstructions blocking the wireless access point wireless coverage of the room.	
			20	d) In school auditorium place the (3) PDS type 2P data outlets on auditorium walls at equal distances around room between 10 to 12 feet off the floor. The auditorium wall area where outlets will be placed should not have any obstructions blocking the wireless access point wireless coverage in auditorium room. If questions arise about exact placement of outlets in these rooms, Contractor should contact IS department.	
			20	e) In school gym, place the (3) PDS type 2P data outlets on gym walls at equal distances around room between 10 to 12 feet off the floor. The gym wall area where outlets will be placed should not have any obstructions blocking the wireless access point wireless coverage in gym room. If questions arise about exact placement of outlets in these rooms, Contractor should contact IS department.	
			20	f) In school gym with dance studios and weight rooms with drop ceiling at 12 feet or below place (1) PDS type 2P data outlet above drop ceiling in these rooms. Locate outlet for wireless access point above ceiling tiles as close to center of each room as possible. 2P data outlet should be located between 12 to 18 inches above drop ceiling. If drop ceiling is above 12 feet or if room has no drop ceiling, place (1) PDS type 2P data outlet on room wall between 10 to 12 feet off the floor. The room wall should not have any obstructions blocking the wireless access point wireless coverage of the room.	
			20	g) In all gym coaches offices (Teacher Planning Area) place (1) PDS type 2P data outlet above drop ceiling in each office. Locate outlet for wireless access point above ceiling tiles as close to center of office as possible. 2P data outlet should be located between 12 to 18 inches above drop ceiling. If drop ceiling is above 12 feet or if office has no drop ceiling then place (1) PDS type 2P data outlet on office wall between 10 to 12 feet off the floor. The office wall should not have any obstructions blocking the wireless access point wireless coverage of the room. If questions arise about exact placement of outlets in these rooms, Contractor should contact IS Department.	

Will Comply	Will Not Comply	N/A			Remarks for Not Complying
				DIVISION 27 - COMMUNICATIONS (cont.) **Horizontal Cable/Raceway/Pathway/Patch Panels**	
			20	h) In all gym and auditorium buildings with concession rooms place (1) PDS type 2P data outlet above drop ceiling in each concession room. Locate outlet for wireless access point above ceiling tiles as close to center of room as possible. 2P data outlet should be located between 12 to 18 inches above drop ceiling. If drop ceiling is above 12 feet or if room has no drop ceiling then place (1) PDS type 2P data outlet on room wall between 10 to 12 feet off the floor. The room wall should not have any obstructions blocking the wireless access point wireless coverage of the room. If questions arise about exact placement of outlets in these rooms, Contractor should contact IS Department.	
			20	i) In cafeteria (Student Dining Area) with drop ceiling at 12 feet or below install (3) PDS type 2P data outlets for wireless access points above drop ceiling. The three 2P outlets should be at equal distances around the room. The 2P data outlets should be located between 12 to 18 inches above drop ceiling. If drop ceiling is above 12 feet or if cafeteria student dining area has no drop ceiling, then place the (3) PDS type 2P data outlets on cafeteria walls at equal distances around room between 10 to 12 feet off the floor. The wall area where outlets will be placed should not have any obstructions blocking the wireless access point wireless coverage in cafeteria room. If questions arise about exact placement of outlets in these rooms, Contractor should contact IS Department.	
			20	j) In Cafeteria Manager Office with drop ceiling at 12 feet or below place (1) PDS type 2P data outlet above drop ceiling. Locate outlet for wireless access point above ceiling tiles as close to center of office as possible. 2P data outlet should be located between 12 to 18 inches above drop ceiling. If drop ceiling is above 12 feet or if office has no drop ceiling then place (1) PDS type 2P data outlet on office wall between 10 to 12 feet off the floor. The office wall should not have any obstructions blocking the wireless access point wireless coverage of the room. If questions arise about exact placement of outlets in these rooms, Contractor should contact IS Department.	
			20	k) In office areas with drop ceiling at 12 feet or below place (1) PDS type 2P data outlet above drop ceiling in all reception areas, conference rooms, and office area workrooms. Locate outlet for wireless access point above ceiling tiles as close to center of each room as possible. 2P data outlet should be located between 12 to 18 inches above drop ceiling. If drop ceiling is above 12 feet or if office has no drop ceiling then place (1) PDS type 2P data outlet on office wall between 10 to 12 feet off the floor. The office wall should not have any obstructions blocking the wireless access point wireless coverage of the room. If questions arise about exact placement of outlets in these rooms, Contractor should contact IS Department.	
			21	IPTV: Provide outlets for IPTV in Classrooms, Administrative Lobby, Cafeteria, Auditorium, Multi-Purpose Rooms and other areas as required by and coordinated with SCPS PM. All outlets are to be 2 port, connected to local IDF/MDF with Cat 6 cables.	
			22	IPTV Classrooms: Outlet to be approximately 42 inches AFF to center line. Coordinate exact location with SCPS PM.	
			23	IPTV - Other Locations: Provide at locations and at height as required by and coordinated with Architect and SCPS PM.	
			24	Provide 1P data outlet in Electrical rooms for power monitoring equipment. Coordinate location with electrical panels.	

Will Comply	Will Not Comply	N/A			Remarks for Not Complying
				DIVISION 27 - COMMUNICATIONS (cont.) **Labeling**	
			1	The specifications shall require all MDF and IDF patch panels, room communications outlets, and cable terminations to be labeled with the room number, outlet number, and port designation, e.g., 101-01-(A-F). Port# = single capital letter representing the port identifier. Port identifiers shall be "A" through "F". If more than one communication outlet in a room, the outlets shall be consecutively numbered in a clockwise direction. All patch panels to be wired and consecutively numbered from lowest room number to highest room number. Sample: 111A - 001 (A-F).	
			2	Specifications shall require labels to be printed (not hand written) and applied on all specified PDS components.	
			3	The Designer shall provide for adequate space within the PDS equipment racks for the installation of network electronics and wire management necessary to connect one hundred percent (100%)of the data connections within any MDF/IDF.	
				27 51 16 Pubic Address/Bell/Paging System (PABS)	
			1	The Designer shall ensure to include all required infrastructure and back boxes to support Owners Vendor. Owner's Vendor shall be responsible for all electronic components and final termination of LV cable. All data cable shall be installed and tested by the contractor	
			2	The PABS system shall be configured as a distributed system with IP Amplifier Nodes at each building to support exterior and corridor speakers, with IP POE Speakers in class rooms. The PABS system is to be an IP based system based on the school's network. The PDS system fiber optic backbone may be utilized for connectivity between buildings. Fiber optic patch cords shall be run from the PDS fiber optic patch panel to PABS equipment. Any network electronics or other equipment to transition from fiber to a copper based IP or other format shall be provided as part of the PABS system. Use of the Owner's network switches and associated bandwidth is not acceptable.	
			3	Bus Ramp: Provide VoIP handset in NEMA 3R hinged enclosure at bus ramp for "All Call" and "Zone Page (at ramp)"	
			4	Administration Reception Desk: Provide VoIP handset at administration reception desk to act as backup to telephone interface.	
			5	All electronic equipment that is part of the PABS system shall be provided with UPS backup. This includes the main PABS equipment and all remote PABS equipment including any associated PABS network electronics. UPS units shall be sized for 90 minutes of including not less than 20 minutes of voice messaging throughout entire campus.	
			6	The only acceptable manufacturers of PABS Systems are AtlasIED and Telecor eSeries. No annual license fees; must be SingleWire partner.	
			7	Provide Dual Sided LED display in center of each Corridor	
			8	Classroom Speakers shall be interfaced with local audio system for priority paging override. Provide additional paging override at sound system head end (Gym, Auditorium, and Multipurpose Rooms)	
			9	Exterior PABS speakers shall be weatherproof flush mount type. Surface mounted cage protected trumpet horns will only be allowed when flush mounting is not possible. Surface mount horns shall be located at a minimum 10 feet AFG. As a minimum, exterior speakers shall be located at bus/parent pick up(s), and on all building elevations. Exterior speakers shall be circuited together and supported by IP AMP in local IDF room.	

Will Comply	Will Not Comply	N/A			Remarks for Not Complying
				DIVISION 27 - COMMUNICATIONS (cont.) **27 51 16 Pubic Address/Bell/Paging System (PABS)**	
			10	PABS Speakers shall be located in all occupied spaces including corridors, group restroom facilities (recessed with vandal proof baffles), cafeteria, and Multipurpose Spaces. Large areas requiring multiple speakers shall be circuited together and supported by IP AMP in local IDF room.	
			11	PABS Classroom, Conference Rooms, and Office Speakers shall be IP POE Wall mounted speaker with flush mounted back box (surface back box is allowed where impossible to mount flush). Speakers shall be provided with LED display.	
			12	Speakers in gyms shall be flush mounted. Surface mounted cage protected trumpet horns will only be allowed when flush mounting is not possible. Surface mount horns shall be located at a minimum 10 feet AFG. Speakers shall be circuited together and supported by IP AMP in local IDF room.	
			13	All terminations of PABS LV cabling shall be done utilizing crimp terminals and din rail mounted termination blocks. Use of 66 Blocks for termination of PABS wiring is not acceptable.	
			14	A VoIP handset in a weatherproof lockable enclosure shall be provided at each bus loading area and at each parent pickup area. Each handset shall be configured as an administrative phone to facility paging of any individual zone or grouping of zones including the zone where the handset is located.	
			15	The specifications shall require the subcontractor/manufacturer to turn over to Owner two CD disks of the system program application and site specific configuration, along with the cable to interconnect the system with a PC. The disks shall be configured such that one disk will include the system software to reinstall the system program and the other for site specific data and system configuration files. The software and data disks shall be complete and allow the Owner to reboot the system and to field modify system programming.	
			16	The system shall have a radio and CD player. An external antenna shall be provided for the radio to facilitate reception of AM and FM signals.	
			17	The specifications shall require the subcontractor/manufacturer to provide complete training and operation manuals and to provide, at Contractor's expense, attendance and training materials at the manufacturer's training school for one SCPS technician within six months of project substantial completion date. Manufacturer's training school must be held within 30 miles of Seminole County. The specifications shall also require an additional four hours of on-site training and hands-on familiarization with the specific project system to train administrative faculty and on-site technical staff.	
				27 53 19 Two-Way Emergency Radio System	
			1	Provide requirements in construction documents for NFPA compliant RF Assessment of the site following building construction to determine requirement to provide Public Safety Radio System throughout building.	

Will Comply	Will Not Comply	N/A			Remarks for Not Complying
				DIVISION 28 - ELECTRONIC SAFETY AND SECURITY **28 05 00 Common Work Results for Electronic Safety and Security**	
			1	Division 27 cabling, surge, and grounding requirements apply for all Category X cable installed as part of a Division 28 system.	
			2	All systems and their raceway design shall comply with the appropriate section, chapter and/or article of NFPA 70 NEC, SREF, EIA/TIA-568-A, EIA/TIA-569, EIA/TIA-606, EIA/TIA-607 and BICSI Telecommunications Distribution Methods Manual (TDMM).	
			3	See Door Hardware for card reader information.	
				28 31 00 Fire Alarm System with Mass Notification	
			1	Fire alarm system wiring shall be installed in conduit (3/4" minimum).	
			2	Fire alarm strobe devices (or combination sounding/strobe units) shall not be specified for exterior locations unless required in an "enclosed corridor" as determined by AHJ.	
			3	Exterior alarm signaling devices shall be of vandal resistant security grade construction or enclosed in a security grade type protective cage.	
			4	All exterior notification devices shall be installed in manufacturer approved weatherproof back boxes.	
			5	Non-digital Fire Alarm System wires for signaling circuit(s) shall be 14 Ga. minimum.	
			6	Fire Alarm zones shall be designed for a minimum of zones per each building, as follows: One zone-manual initiation device for each floor, one zone-automatic initiation device for each floor, one zone-notification circuit per building.	
			7	Digital/Addressable Systems shall be specified to allow for field programming by SCPS Operations and Facilities Services technicians.	
			8	The specifications shall require the fire alarm subcontractor/manufacturer to turn over to Owner two Flash Drives of the Fire Alarm System program application and site specific configuration. The disks shall be configured such that one disk will include the system software to reinstall the system program, and the other for site specific data and system configuration files. The software and data disks shall be complete and allow the Owner to reboot the system and to field modify system programming. One shall be delivered to Facility Services and the other to be kept in the FACP with the most current program.	
			9	The specifications shall require the fire alarm subcontractor/manufacturer to submit complete training and operation manuals and to provide, at Contractor's expense (less travel expenses) attendance and training materials at the manufacturer's training school for two SCPS alarm system technician within six months of project substantial completion date. The specifications shall also require an additional four hours of on-site training and hands-on familiarization with the specific project system to train administrative faculty and on-site technical staff.	
			10	The building control system (BCS) shall shut down all fan terminal boxes (FTB's) not the fire alarm system.	

Will Comply	Will Not Comply	N/A			Remarks for Not Complying
				DIVISION 28 - ELECTRONIC SAFETY AND SECURITY (cont.) **28 31 00 Fire Alarm System with Mass Notification**	
			11	The fire alarm annunciation panel and system program shall be consistent with the permanent Florida Inventory of School Houses (FISH) numbering sequence to provide immediate knowledge of alarm locations to the department responders, staff and administration. All addressable devices shall be labeled in the field with the same address as programmed in the FACP. End of line devices shall be noted specifically in the address to identify them as such.	
			12	Fire alarm annunciation panel shall be located adjacent to the administration desk and shall be provided with voice microphone for mass notification paging. Provide local manual station at this location.	
			13	Any additions or expansions to existing fire alarm systems shall be designed and specified to ensure the complete system maintains an Underwriters Laboratory listing.	
			14	Gas line shutoff valves activated by the fire alarm system shall have reset switches accessible from a convenient location (Science Teacher Planning Room).	
			15	Gas lines serving kitchens and not passing through student occupied areas shall have the associated shutdown valve controlled by the kitchen hood and not the fire alarm system.	
			16	Splices in underground pull boxes shall not be allowed. If distances involved required splicing of cable, appropriate above ground enclosures shall be provided.	
			17	The only acceptable manufacturers of fire alarm systems are: 1. EST 2. Notifier 3. Silent Knight 4. Or Approved Substitution	
			18	Fire alarm system shall be one of the acceptable manufacturer's most recent model. The specifications shall require that two weeks prior to submission of shop drawings, the proposed model of fire alarm panel to be submitted shall be reviewed with SCPS Facilities Services Department for approval prior to submission to A/E. In the case of projects with contract durations greater than five months, reconfirmation of the most current fire alarm panel model being provided shall be made not more than eight weeks prior to installation of any fire alarm panel equipment.	
			19	Monitoring of fire alarm system shall be via an Owner furnished DMP iCom IP based monitoring unit. Fire alarm system shall include battery capacity and power supply for this unit. Fire alarm system shall provide three discrete contacts to individually annunciate Alarm, Trouble and Supervisory to the IP based monitoring unit. Coordinate two ports of data connectivity to IP monitoring unit.	
			20	New fire alarm systems shall not have any copper cabling running between buildings. Each building shall have a mode panel capable of standalone operation. Backbone interconnecting the panels shall be a Class A fiber optic ring routed from panel to panel in a separate conduit dedicated to the fire alarm fiber optic cable.	
			21	Heat or smoke detectors will not be designed for placement into a timeout room.	
			22	All device location lights and reset switches shall be located in public spaces adjacent to the device they monitor.	
			23	All duct detectors shall have a remote test station regardless of the duct detector location and accessibility.	

Will Comply	Will Not Comply	N/A			Remarks for Not Complying
				DIVISION 28 - ELECTRONIC SAFETY AND SECURITY (cont.) **28 31 00 Fire Alarm System with Mass Notification**	
			24	The specifications shall require the contractor to submit a detector sensitivity report with the closeout documents.	
			25	The specifications shall require the Contractor to perform the first year annual recertification of the fire alarm system one year after project substantial completion, and shall schedule the inspection with the SCPS Facilities Services Department, Attention Electrical Supervisor. Deficiencies noted that are warranty related shall be immediately repaired at no additional cost to SCPS.	
			26	Duct detectors shall be provided with venturi tubes sized for the full width of the duct. Tubes shall be supported every 24 inches MIN and on far end to prevent damage.	
				28 23 00 Video Surveillance System (Pre-Wire)	
			1	Rough-in and prewiring shall be provided for surveillance system. Cameras and final terminations at cameras to be provided by Owner's vendor. Terminations at IDF to be by Contractor. Exact requirements, layouts, locations of cameras, etc.., for each project shall be confirmed with SCPS Project Manager.	
			2	Provide a star topology raceway system from the IDF of each building to the MDF for Owner's future use in routing Video Surveillance System bone cabling. System shall provide one 2 inch minimum conduit from each IDF. Layout and arrangement of conduits shall be reviewed with SCPS Project Manager for compliance with latest requirements.	
			3	Provide raceways as required to support Owner's future cameras at locations identified by SCPS.	
				28 41 00 Intrusion Detection System (Pre-Wire)	
			1	Rough-in and prewiring shall be provided for intrusion detection system. Devices and final terminations to be provided by Owner's vendor Sonitrol. Exact requirements for each project shall be confirmed with SCPS Project Manager.	
			2	Provide rough-in and pre-wiring for a door contact at each exterior door. Pre-wiring shall include a cable from each door contact to the Intrusion Detection System Control Panel. Provide ten feet of slack at each end.	
			3	Provide rough-in for keypads at locations determined with SCPS. Pre-wiring shall include a cable from each door contact to the Intrusion Detection System Control Panel. Provide ten feet of slack at each end.	
			4	Provide rough-in for data wiring between control panels and systems terminal cabinets. Pre-wiring shall include a cable from each system's terminal cabinet to the Intrusion Detection System Control Panel. Provide twenty feet of slack at each end.	
			5	Provide rough-in for audio sensors at all first floor rooms/corridors with exterior entry or windows. Provide rough-ins for audio sensors in upper floor rooms/corridors where a means of ready means of access exists such as a second floor walkway. Pre-wiring shall include a cable from each device back to the Intrusion Detection System Control Panel. Provide ten feet of slack at each end.	
			6	Cabling above accessible ceilings may be runs without conduit and supported by J-Hooks four to five feet on center. Rough-in for wall mounted devices shall include an outlet box and conduit turned out into an accessible ceiling space.	
			7	Provide rough-in and wiring for other security devices as determined by SCPS and their vendor. Coordinate requirements during design with SCPS Project Manager.	

Will Comply	Will Not Comply	N/A			Remarks for Not Complying
				DIVISION 28 - ELECTRONIC SAFETY AND SECURITY (cont.) **28 51 00 Access Control**	
			1	Provide new access control system (ACS), complete. Coordinate with SCPS Project Manager for door locations, etc. Coordinate with Architect for type of hardware. In general, provide system complete for all exterior doors, mechanical rooms, electrical rooms, systems rooms/closets (IDF/MDF, etc.)	
			2	Provide new access control system (ACS) equipment for the connection of all new security doors and existing doors retrofitted with new ACS hardware.	
			3	All equipment hardware, etc., shall be compatible with Avigilon ACS software. Utilizing NON-Proprietary Mercury ACS Control Boards.	
			4	All Software must be by the same manufacturer of the ACS equipment and shall meet the minimum requirements identified below.	
			5	Access Control and Security Management System Components: The ACSMS shall consist of three components: Database Server, Application Server, and User Interface. These components shall run on a single computer, virtual or physical or on multiple computers allowing scalability in the configured architecture.	
			6	Locations of Software and User Interface Equipment, Application Server Software to be installed on central SCPS virtual Server located in SCPS ESE Building. Contractor shall coordinate with SCPS IT for exact installation requirements	
			7	ACS Cards: Provide 200 HID Prox cards for the Owner's use. Program (enroll) all cards and credentials as requested by the Owner.	
			8	The system shall include all required software, licenses, programming, setup, testing and debugging of the system to implement the software upgrades and modifications, system interfaces and to integrate new access control doors into the ACS system.	
			9	The system shall include all required programming, ACSP addressing, testing and debugging required for reconfiguration of the communications loops as required.	
			10	The system shall include all required software, programming, setup, testing and debugging of the system to implement the software upgrades and modifications, system interfaces and to integrate new access control doors at the SCPS School Board. Access shall be given to appropriate District Security Representatives. Contractor shall confirm with SCPS Construction Representative.	

Will Comply	Will Not Comply	N/A			Remarks for Not Complying
				SITE DEVELOPMENT	
			1	Finished floor slab elevations (ground floor level) shall be designed such that the floor elevation is a minimum of 8" above adjacent grade to the building, which includes weep holes and flashing. Renovation and remodeling projects shall include modifications to the space and adjacent grades such that the above criteria is met. Swales and runoff collection systems shall be designed and elevations clearly shown on the construction documents to ensure drainage is collected and transported away from all buildings.	
			2	For new campus projects, the architect shall provide space for and indicate on the construction documents, an area for no more than 9 future relocatable classrooms (plan for the most expansive scenario of using wood portables with their associated setback requirements, as space for hybrids and concretables will be more compact). The Architect shall coordinate the MEP services that are to be provided in Divisions 21 – 27 of these standards. The area shall not conflict or encroach upon the area for playground equipment or building setbacks, including the designated safety zone.	
			3	Chain link fence shall be of minimum 9 GA fabric thickness at all locations. All posts shall be set in concrete bases. Tension wire in lieu of top rail shall be specified for all locations where fencing is 6' and higher. Top and bottom selvages shall be knuckled/turned into the fabric.	
			4	Chain link fencing in highly visible locations shall have a black vinyl coated 2” mesh and 9 gauge core, and matching black vinyl coated posts, gates, and hardware.	
			5	All exterior athletic courts shall have flexible base material specified. Soil cement or concrete shall not be specified as a base material for any exterior athletic courts. Tennis court fencing shall be black vinyl, coated fence fabric, rails and posts. Windscreens shall not be specified.	
			6	Flush ribbon curb turnouts and aprons (8” thick concrete) from roadways, walkways, and parking areas shall be provided to allow for maintenance access to the adjacent grounds without climbing over raised curbing. Design school walkways, courtyards, and areas between buildings without obstructions to efficiently move supplies, equipment, and furniture from place to place with golf carts, hand trucks, pallet trucks, and other wheeled equipment. Provide ramps, 6” thick concrete walks, and adequate door openings in strategic places to accommodate hand truck, pallet truck, and golf cart movement throughout the facility.	
			7	Peninsula and detached islands in parking areas shall have 6” raised curbing. Islands in parking areas shall have 6” raised curb perimeters. When the island area exceeds 1,000 s.f., the curb shall taper down to a flush ribbon curb for 6’ in length at a location that is inaccessible to vehicles yet allows for mower access onto the island. Provide 6’ minimum distance between fences and curbs at ponds.	
			8	All site traffic and regulatory signage shall comply with the Manual of Uniform Traffic Control Devices, US Federal Highway Administration. All signs shall be installed on a 2.5” diameter, 0.125” thickness, aluminum post with adequate concrete foundation.	
			9	The area for playground equipment shall be free of trees, fire hydrants, FDC’s, PIV’s, telephone posts or other items and be located in a designated safety zone. The safety zone is the area that the equipment is placed upon plus a minimum 6' area around the perimeter of the equipment.	
			10	Curbs (flush or raised) at bus and vehicle drop off/pick up locations shall be painted yellow.	
			11	Except at pickup locations, sidewalks shall be kept a minimum of 5’ (edge of walk to edge of pavement) away from vehicular roadways, unless approved by SCPS.	

Will Comply	Will Not Comply	N/A			Remarks for Not Complying
				SITE DEVELOPMENT	
			12	At PIV, FDC, and fire hydrant locations, provide hashed lines on paving for a “no parking zone” that is accessible.	
			13	Fire lanes and access roads must be marked with freestanding signs with the wording “No Parking Fire Lane by Order of the Fire Department”. Signs shall be 12” x 18” with a white background and red letters and shall be a maximum of seven feet in height from the roadway to the bottom part of the sign and shall be within sight of traffic flow, per code.	
			14	All FDC’s shall be identified by a sign that states “No Parking – Fire Department Connection”, and shall be designed in accordance with Florida Department of Transportation standards for informational signage, and shall be visible, per code.	
			15	Fire Protection Appliances (including FDC’s, PIV’s, etc.) shall have clearances of 7’-6” in front of and to the sides of the appliance, without interference of any nearby objects including buildings, fences, posts, or other fire department connections, and shall be visible, per code.	
			16	Fire hydrants shall have clearances of 7’-6” in front of and to the sides of the fire hydrant, with a 4’ clearance to the rear of the hydrant, and shall be visible, per code.	
			17	PIV’s may be supervised by one of the four ways identified by code, but should be locked in the open position.	
			18	Required fire lanes shall be provided with the inner edge of the roadway no closer than 10 feet and no further than 30 feet from the building. Such lanes shall have a surface designed to accommodate fire apparatus with a minimum weight of 32 tons.	
			19	Fire department access roads shall have an unobstructed vertical clearance of not less than 13’-6”.	
			20	Fire department access roads shall have an unobstructed width of not less than 20’ and unobstructed vertical clearance of not less than 13’-6”.	
			21	Fire department access “roads” shall consist of roadways, fire lanes, parking lot lanes, or a combination thereof.	
			22	Fire department access roads shall be designed and maintained to support the imposed loads of fire apparatus and shall be provided with all-weather driving surface.	
			23	Clearances shall be marked on both sides of building and canopy overhangs that protrude into bus and car driveways, or parking lots.	
			24	Only reinforced concrete wheel stops shall be specified for spaces not abuting raised curbing. Wheel stops shall be painted reflective traffic yellow, with the exception of handicapped accessible spaces which shall be pursuant to the Florida Accessibilty Code.	

Will Comply	Will Not Comply	N/A			Remarks for Not Complying
				DEMOLITION & CLEARING	
			1	Burning of tree and shrub debris shall not be permitted. Note for A/E: Should the Contractor determine that burning is permissible with the local fire authorities and the Owner's Construction Representative (OCR) feels that allowing burning would best serve the Owner's financial interest, a credit shall be received from the contractor.	
			2	Construction/site clearing debris shall be recycled and disposed of off-site unless specifically noted otherwise.	
			3	Specifications shall require disposal of hazardous materials be performed in accordance with Federal and State recycling regulations.	
				EARTHWORK	
			1	Unless the site is remotely located away from any structure or residence, the specifications shall prohibit the use of vibratory compaction to achieve specified soil density. The civil engineer will coordinate with the geotechnical engineer to ensure the geotechnical report does not allow vibratory compaction and that alternative means are specified.	
			2	Termite treatment chemicals specified shall be Fipronil (trade name “Termidor 80WG”) and shall be applied by a manufacturer’s certified applicator. The specifications will require chemicals to be brought to the site in sealed containers and mixed on site in the presence of the Owner's Construction Representative. Exterior grade beyond foundation perimeter out to 3’ shall be sprayed after final grade prior to sodding.	
			3	Soil cement pavement base shall not be specified without written approval by SCPS.	

Will Comply	Will Not Comply	N/A			Remarks for Not Complying
				SITE UTILITIES	
			1	Upon determination of applicability by the design engineer, the specifications shall require the contractor prepare and submit to Florida Department of Environmental Protection, the “Notice of Intent” and subsequently, the “Notice of Termination” for “Stormwater Discharge From Construction Activities”, per the Florida Administrative Code. The specifications shall further require that the contractor prepare and submit with the application, an approved “Stormwater Pollution Prevention Plan” and to perform/certify all inspections and retain all inspection reports and documentations on file as required for DEP review. All fees shall be paid by the contractor, and the contractor shall be responsible for any penalties or fines DEP may levy for failure to comply with the permitting requirements.	
			2	All PVC utilities (less irrigation lines less than 4" in diameter) shall have #10 GA copper tracer wire located directly above the line and terminate on a metal device accessible from the surface without excavation. In addition, plastic marker tape indicating the type of line shall be located no less than 2' directly above the utility line. The tape and wire/terminations shall be inspected by the Owner's Construction Representative prior to backfill.	
			3	All storm water outfalls shall have protection grates and horizontal energy dissipation pads per FDOT specifications. All steel grates shall be hot-dipped galvanized, and fastened to the structure.	
			4	In addition to bacteriological testing that may be required by DEP, a minimum of 1 bacteriological test for the interior of each floor and building shall be taken at a point directed by the Owner and at the contractor’s expense.	
			5	The specifications shall clearly state the requirements for DEP permit clearances prior to activation of any potable or waste water system. The specifications shall clearly require the contractor to submit required test results and sealed as-built site utility drawings to the engineer. Upon acceptance of the system, the engineer of record shall submit the clearance request form and supporting documents to DEP for system clearance. The engineer shall be responsible for tracking and enforcing this requirement under the construction contract. The engineer will clearly specify any requirements for similar action for any systems that are under the jurisdiction of local municipalities and will enforce these requirements.	

Will Comply	Will Not Comply	N/A			Remarks for Not Complying
				LANDSCAPING & IRRIGATION	
			1	Irrigation systems shall be designed by the A/E and clearly detailed on the construction drawings. Irrigation systems designed by the installer shall not be allowed.	
			2	Schedule 40 (purple) PVC pipe shall be specified for all irrigation lines less than 4" in diameter. All irrigation heads shall be pop-up type, except irrigation for hedges and planter beds shall be a soaker type buried beneath the mulch. Fixed head, stationary risers shall not be specified for any location. Specifications shall require piping to be buried a minimum of 18" below the surface for branches and 24" for mains.	
			3	All irrigation wells shall have as a basis of bid of 100 FT in depth. A unit cost ($/FT of depth) shall be solicited for depths in excess of 100 FT.	
			4	On site reclaimed water service, regardless of size, shall be purple color PVC.	
			5	All landscaping shall have root ball wraps and bindings cut and completely removed prior to planting.	
			6	All sloped surfaces (as a minimum) shall be sodded and staked when slopes equal or exceed 50%. Limits of sodding shall be clearly delineated on the drawings. A/Es are strongly encouraged to consider sodding throughout entire site.	
			7	Playfields shall be sodded if project schedule does not provide for adequate germination and establishment of grass from seed or sprigs.	
			8	Do not utilize rolled sod with plastic mesh. Only use thrown (pieced) sod. The specifications shall require all spaces between newly placed sod be filled in with organic soil material, rolled and fertilized.	
			9	Landscaping design and plant selection shall be native to Florida and low maintenance type. Preferred plants shall be Drake Elm, Live Oak, Magnolia, Crepe Myrtle, Liriope, Indian Hawthorne, Sabal Palm, Wax Myrtles, and Viburnum. Pine trees shall not be specified. The SCPS Project Manager can provide the complete list acceptable plants.	
			10	Planting beds shall be specified to receive a uniform 4" (minimum depth) of settled rustic cypress mulch. Use cypress mulch adjacent to buildings. Pine bark mulch chips are permissible at beds not adjacent to buildings. Playground area ground surfaces shall have 12" minimum depth of engineered wood fiber mulch.	
			11	New tree specifications shall require drip bags.	

PROJECT CONSTRUCTION SIGN
APPENDIX A

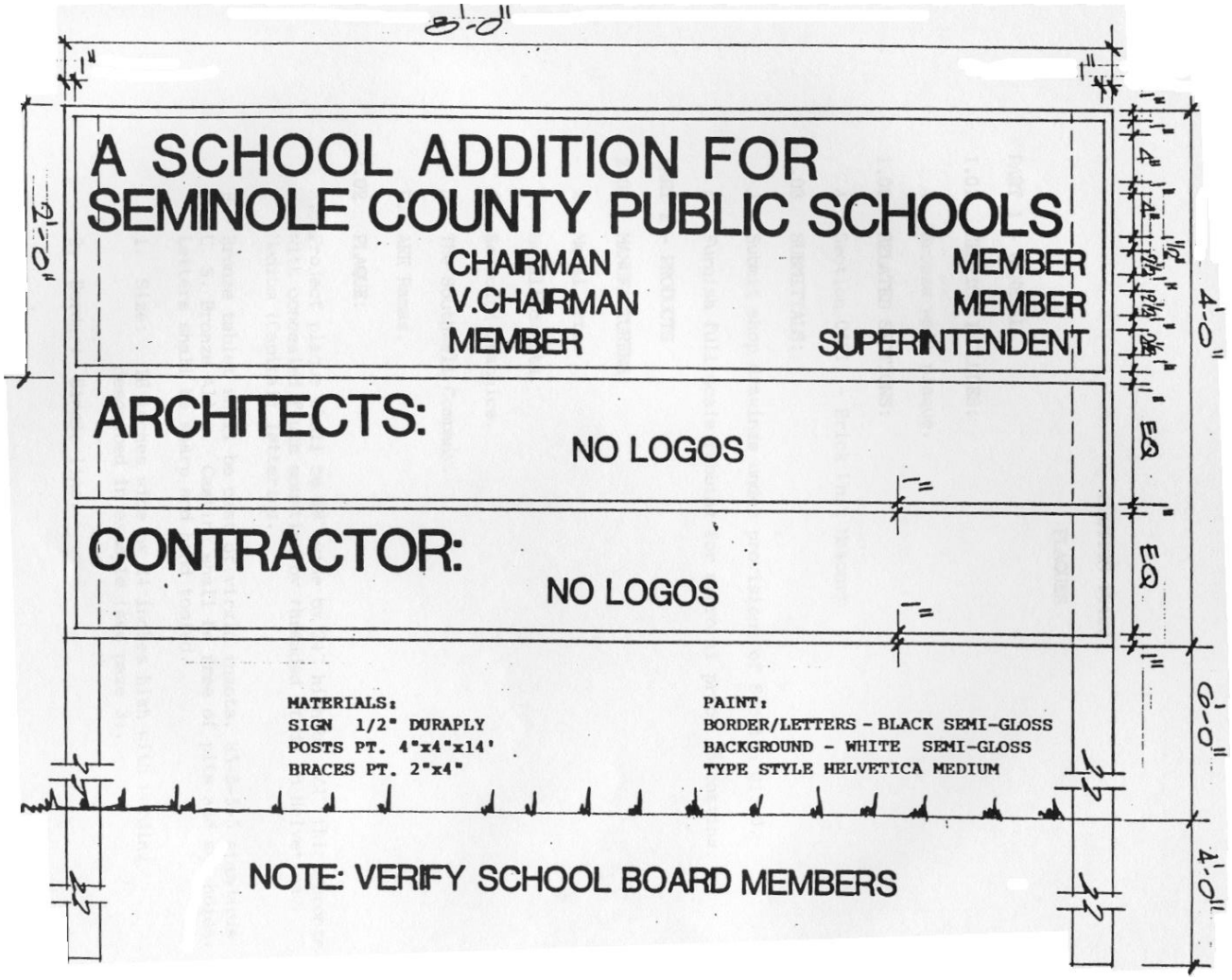

TYPICAL CLASSROOM TEACHING WALL MARKER/TACKBOARD LAYOUT
APPENDIX B

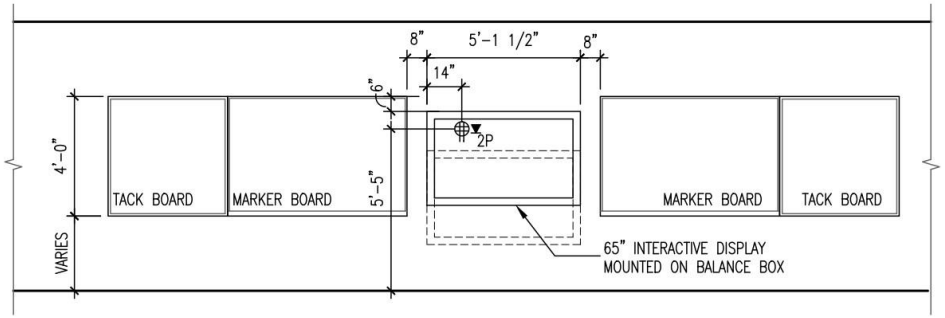

TYPICAL COLLABORATION STATION

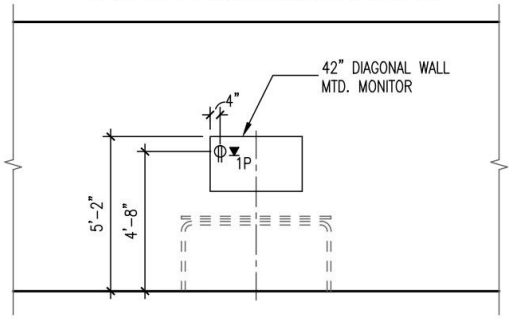

Note: Typical marker/tack board sizes for the teaching wall in all classrooms shall be as follows:

Primary Campuses:
Marker boards-1EA, 12' W x 4' H, Tack boards: 2EA, 1 Ea Side 6' W x 4' H. Mounted 29" AFF.
Secondary Campuses:
Marker boards-1EA, 16' W x 4' H, Tack boards: 2EA, 1 Ea Side 4' W x 4' H. Mounted 34" AFF.
All Campuses: Confirm monitor & Interactive Display with Project Manager

On Teaching wall layout Include empty 1-1/4" conduit chase from above finished ceiling, stubbed out at 5'5" above the finish floor for low voltage cabling.

Typical Collaboration Station layout Include empty 1" conduit chase from above finished ceiling, stubbed out at 5'5" above the finish floor for low voltage cabling.

PROJECT DEDICATION PLAQUE
APPENDIX C

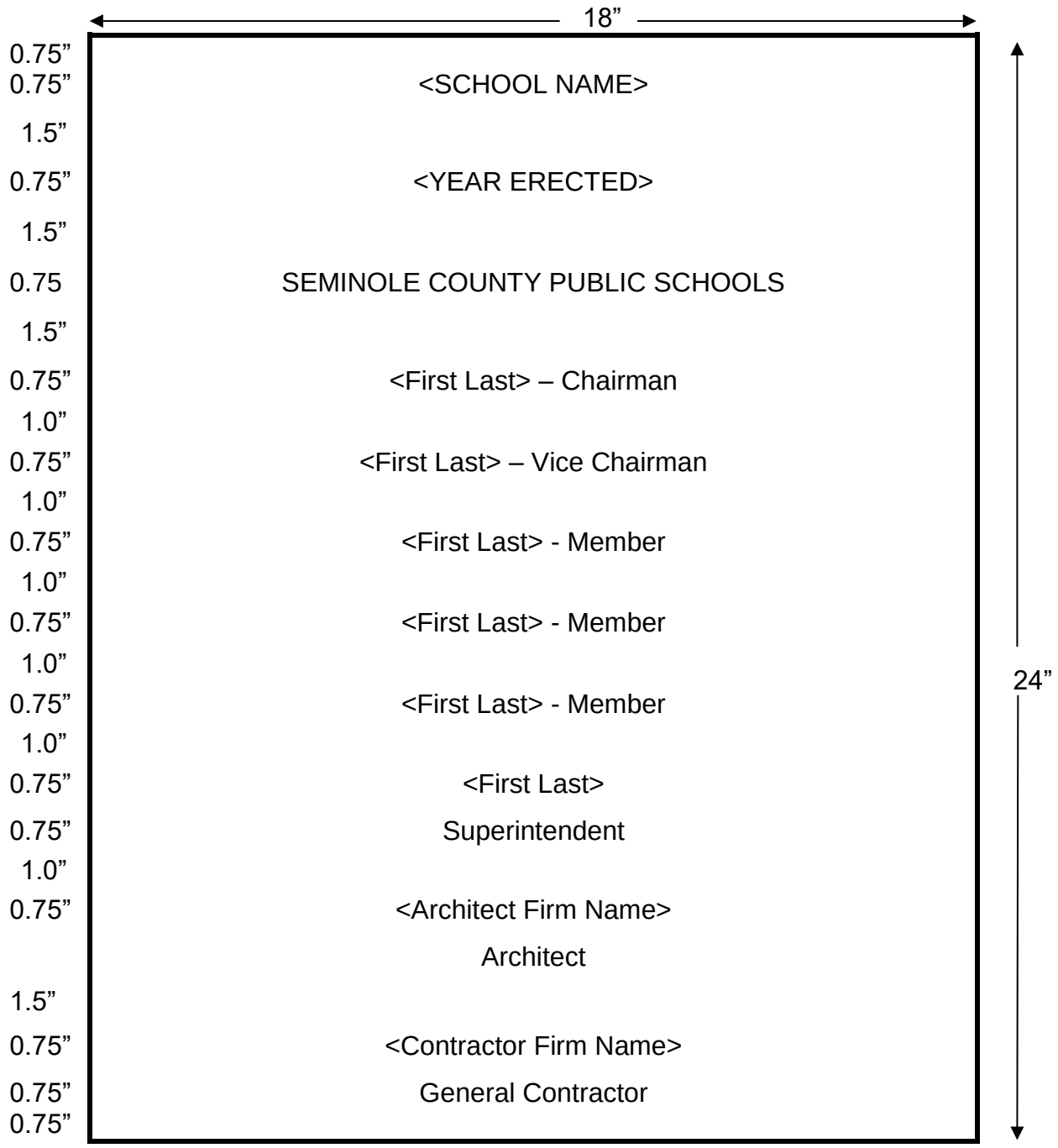

Plaque to be ¾” thick bronze with concealed flush mounting by threaded studs. Lettering to be Helvetica Medium. Border - single line. Background - leatherette texture

TYPICAL ROOM SPACE ADA SIGNAGE
APPENDIX D

1. Located on the strike side of the door entering the space per the Florida Accessibility Code.
2. Size of the sign to be approx 7.5”w x 7.58”h. Space FISH number shall be on top line.
3. Spaces requiring accessibility designation shall be indicated in accordance with the Florida Accessibility Code, along with mounting heights and distances.
4. Indicate space use on sign in general single word description such as “Classroom”, “Office”, “Storage”, “Custodial”, “Mechanical”, “Electrical”, etc. Restrooms and gender specific spaces shall have the single description gender word of the space. Locker and dressing rooms shall have two lines with the gender name immediately below the “Lockers” or “Dressing” room space name.

TYPICAL CAMPUS SIGN
APPENDIX E

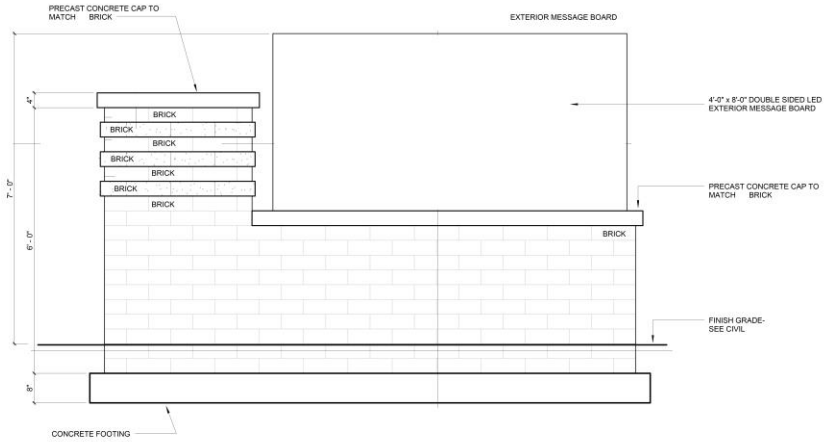

CAMPUS SIGN ELEVATION

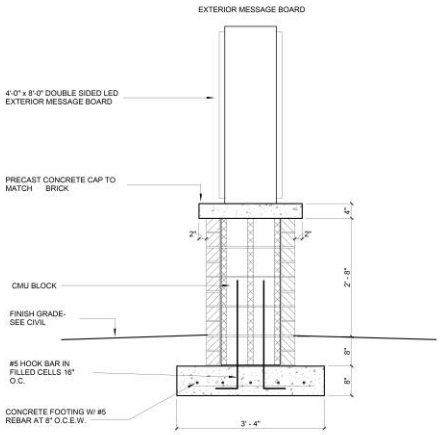

CAMPUS SIGN SECTION